instruction manual for the Collins Dry Spirometer

06500 06501 06503

also modules

06521 06523 06525

06527 22966

manual number 22162

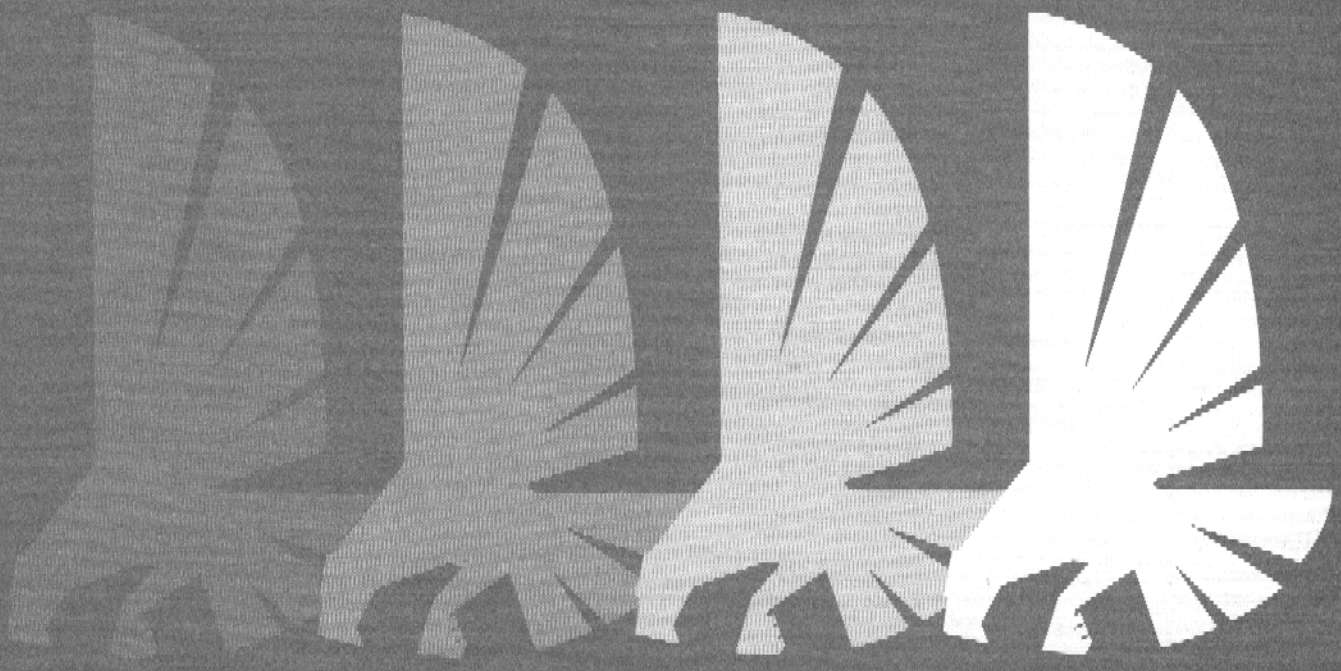

PRODUCT CERTIFICATION

Warren E. Collins, Inc. certifies that this equipment was thoroughly inspected and tested and met its published specifications when it was shipped from the factory.

GUARANTEE*

All apparatus and accessories, with the exception of rubber and plastic materials, are guaranteed for one year from the date of delivery to be free from original defects in workmanship and materials under normal and proper use. All rubber or plastic materials are guaranteed for 90 days from the date of delivery. This guarantee covers the repair or replacement of the equipment at the option of the manufacturer.

Defective parts or components must be returned to the factory for repair or replacement after verbal or written return authorization is granted. No charge will be made under warranty except transportation to and from the factory. All returns should be prepaid. Upon request, a qualified technician will service the equipment at an hourly charge plus transportation and expenses. No other warranties are expressed or implied and the manufacturer is not liable for any special or consequential damages that may result in the use of this equipment.

*Those items manufactured by other than Warren E. Collins, Inc. are subject to that manufacturer's guarantee only.

MANUAL NO. 22162 PRINTED: January 1977

Additional Manuals available at $4.00 each.

LIST OF ILLUSTRATIONS

TABLE OF CONTENTS

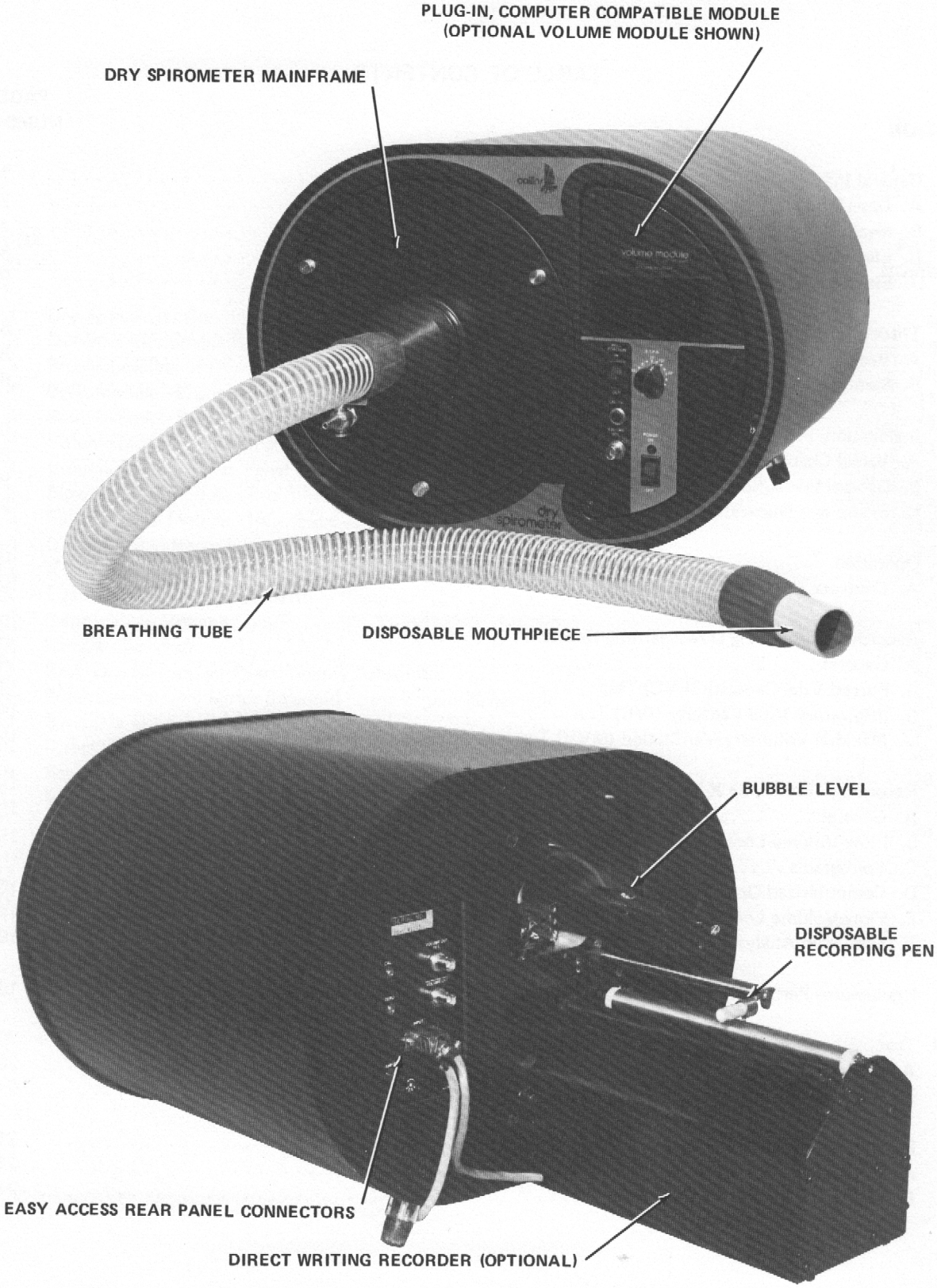

Figure 1 - Dry Spirometer Components

INSTRUCTION MANUAL FOR THE COLLINS DRY SPIROMETER

I. GENERAL INFORMATION

I.A. DESCRIPTION

A.1. The Collins Dry Spirometer consists of two major components (plus four optional components). Although it is available in a variety of configurations, each unit consists of the dry spirometer mainframe and a plug-in test module. The components are held in rigid alignment with rugged aluminum castings and the entire spirometer is enclosed in an attractive metal cabinet. The basic equipment layout is shown in Figure 1.

A.2. A basic supply of operating accessories is shipped with your unit as well as appropriate supplies for optional equipment purchased:

a. Breathing Tube (1)
b. Breathing Tube Adapter (1)
c. Disposable Mouthpieces (1 Box of 100)
d. Rubber Tipped Noseclip (1)
e. X-Y-T Recorder Paper (1 Box of 100 Sheets)
f. Direct Writing Recorder Paper (1 Roll)
g. Disposable Recording Pens (for either or both recorders)
h. Dry Spirometer Overlay (1)

Section VII contains a complete list of replaceable parts and catalog numbers required for reordering.

A.3. All the optional equipment for the Dry Spirometer is shown in Figure 2. The operation of each one is fully covered in the appropriate sections of this manual. The optional equipment includes:

a. Volume Module
b. Flow-Volume Module
c. Direct Writing Recorder
d. X-Y-T Recorder

I.B. MECHANICAL SPECIFICATIONS

B.1. Dimensions

a. Dry spirometer with any plug-in module:

Height: 13¼" (12½" panel only)
Width: 18"
Depth: 27" (including snout)
Weight: 27 pounds (approx.)

b. Dry Spirometer with Direct Writing Recorder: Add 2" to depth

c. X-Y-T Recorder:

Height: 6¾"
Width: 19"
Depth: 15½"
Weight: 40 pounds (approx.)

B.2. Operating Characteristics

Volume: 8.6 liters
Dead Space: 1.42 liters (with baffle in place)
Static Resistance: less than 0.1 cm H_2O
Dynamic Resistance: less than 0.1 cm H_2O at constant flow of 300 liters/min
Frequency Response: flat from 0-5 Hz ± 10% from 5-10 Hz
Bell Factor: 55.0 ml/mm

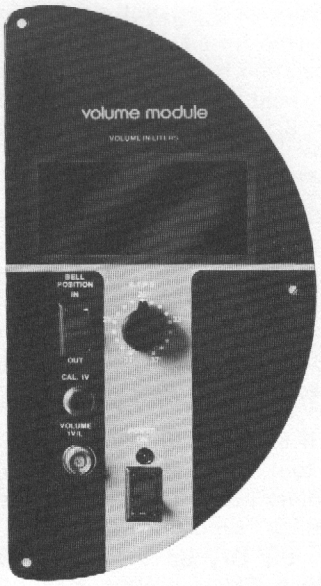

2a. Volume Module

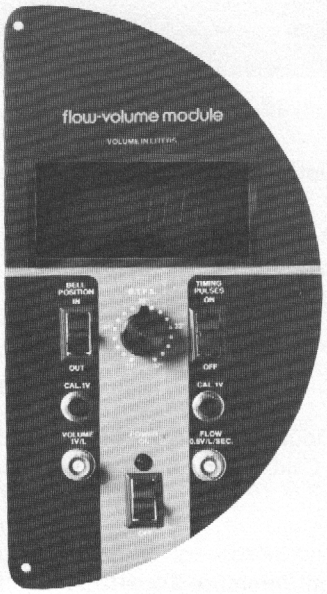

2b. Flow-Volume Module

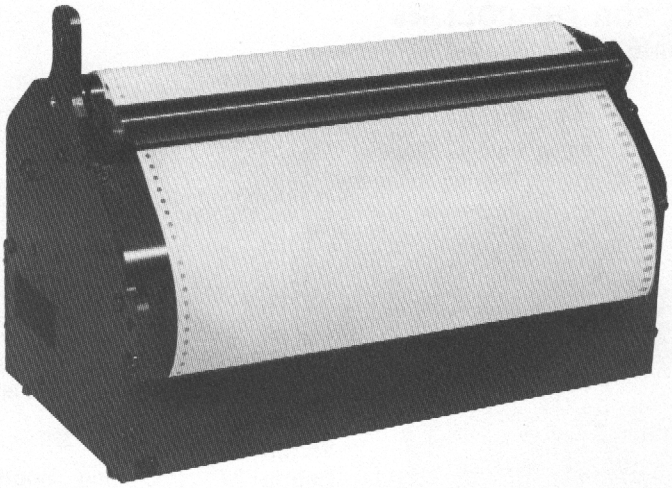

2c. Direct Writing Recorder

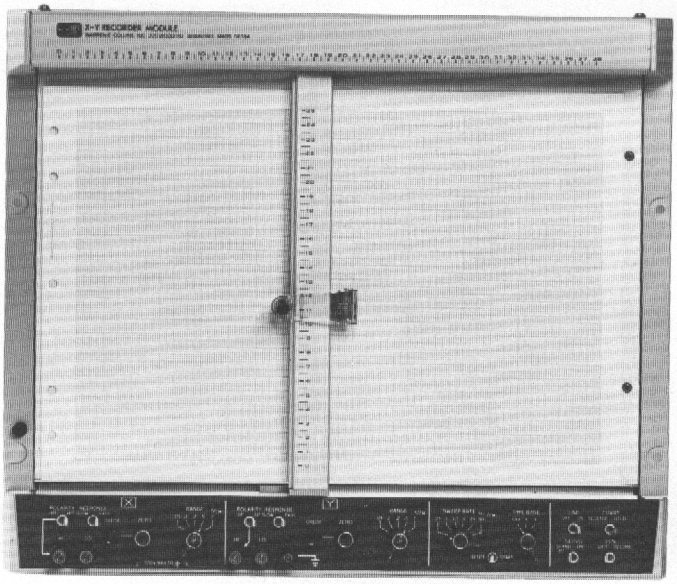

2d. X-Y-T Recorder

Figure 2 - Optional Equipment for Dry Spirometer

I.C. ELECTRICAL SPECIFICATIONS

C.1. Basic Module (Bell Position) - Catalog No. 06500

Calibration Factor: typically 1.0 volt/liter, variable from 0.1 to 1.0 volt/liter

C.2. Volume Module - Catalog No. 06501/06523

Calibration Factor: 1.0 volt/liter at 37°C for standard output
0.1 volt/liter for computer output

Calibration Reference Signal: 1 volt = 1 liter

BTPS Correction: variable from 17°-37°C

Operating Range: 8.6 liters

Accuracy: ±0.5% of full scale

Drift: negligible after warm-up

C.3. Flow-Volume Module - Catalog No. 06503/06525

Calibration Factors: volume: 1.0 volt/liter at 37°C for standard output
0.1 volt/liter for computer output

flow: 0.5 volt/liter/sec

Cal. Ref. Signals: volume: 1 volt = 1 liter

flow: 1 volt = 2 liters/sec

BTPS Correction: variable from 17°-37°C

Operating Range: volume: 8.6 liters

flow: ±20 liters/sec

Accuracy: volume: ±0.5% of full scale

flow: ±0.5% of full scale

Timing Pulses: switchable, ON-OFF - rear panel magnitude adjustment, three pulses per flow-volume loop, factory set to correspond to FEV 1, 2, 3 (other time intervals available on request)

Drift: negligible after warm-up

C.4. Direct Writing Recorder - Catalog No. 06527

Speeds: 320 and 1280 mm/min

Power Requirements: 115 VAC, 60 Hz, single phase, .5 amps.

C.5. X-Y-T Recorder - Catalog No. 22966

Refer to manufacturer's instruction manual.

I.D. ELECTRICAL REQUIREMENTS

D.1. Unless otherwise specified on the original order, the Dry Spirometer is powered from a 115 VAC, 60 Hz, single phase, 1 amp source. Operation from any other source will seriously damage the instrument and such damage is not covered by the warranty. The proper power source is noted on the rear panel.

II. THEORY

II.A. BACKGROUND AND APPLICATIONS

A.1. The Collins Dry Spirometer is designed as a high performance instrument capable of giving highly accurate, repeatable rest results.

A.2. Operation is exceptionally simple making this unit a perfect training tool for students. Additionally, the use of plug-in test modules makes updating to incorporate more complex studies a simple modification. This design flexibility makes the Dry Spirometer an ideal instrument for mass screening or research applications.

A.3. The testing procedures are quite simple from the

patient's point of view and usually take four to five minutes depending, of course, upon patient cooperation and health. The patient breathes through a disposable mouthpiece and breathing tube which in turn is connected to the opening of the Dry Spirometer.

A.4. Tests which can be performed with the Dry Spirometer include:

Vital Capacity (VC)
Forced Vital Capacity (FVC)
FEV_T
$FEV_T/FVC\%$
Maximal Midexpiratory Flow (MMF)
$FEF_{25-75\%}$
$FEF_{200-1200}$
Maximal Voluntary Ventilation
Inspiratory Capacity (IC)
Inspiratory Vital Capacity (IVC)
Forced Inspiratory Vital Capacity (FIVC)
Expiratory Reserve Volume (ERV)
*Flow-Volume Loops

*Performed with Flow-Volume Module 06503/06525 only.

A.5. Spirometry is recorded as hard copy with the addition of either the X-Y-T Recorder 22966 or the Direct Writing Recorder 06527. Hard copies of flow-volume loops are possible using the X-Y-T Recorder only.

II.B. STANDARD AND OPTIONAL EQUIPMENT

B.1. Dry Spirometer Mainframe
The same dry spirometer mainframe is used in all versions of this instrument. Lightweight aluminum castings are used assuring lifetime alignment of critical moving parts. A lightweight vinyl piston with a 0.030" wall thickness coupled to a 0.010" silicon rubber seal is used which reduces compliance and resistance to less than 0.1 cm H_2O.

The spirometer provides a mechanical means for accurately measuring inspiratory and expiratory volumes during breathing maneuvers. The mechanical volume is converted to an analog electrical output signal by a sliding linear motion potentiometer inside the spirometer housing.

Bell positioning is positive and direct. A front panel switch activates a servo control D.C. motor which moves the bell to a precise position. There are no troublesome pulley and string arrangements utilized in this design.

For simple cleaning, the three knurled knobs and spirometer cover are removed to expose the piston and cylinder. The complete cleaning procedure is included in Section VIII.

B.2. Plug-In Test Modules
The Basic Module 06500 is the most fundamental of the three plug-in modules. It is computer compatible and has a single front panel switch for bell positioning. In situations where a Collins computerized system is incorporated, BTPS correction and digital volume display are provided by the computer system.

The Volume Module 06501/06523 and the Flow-Volume Module 06503/06525, equipped with digital display and variable BTPS correction, provide additional flexibility when the Dry Spirometer is used as a stand-alone unit. These units, also computer compatible, are designed to work with either the Direct Writing Recorder or X-Y-T-Recorder.

B.3. Direct Writing Recorder (Optional)
The roll-feed, two speed recorder is a direct recording unit which attaches to the back of the Dry Spirometer chassis. A rear panel switch selects either the 320 or 1280 mm/min paper speed. In order to conserve paper, the recorder is turned on and off by a remote, hand held switch.

B.4. X-Y-T Recorder (Optional)
The X-Y-T Recorder plots spirometry, and when used with the Flow-Volume Module, it also plots flow-volume loops.

III. INSTALLATION

III.A. VISUAL CHECK

A.1. This equipment met strict electrical and mechanical quality control standards before leaving the factory. After uncrating, thoroughly inspect the equipment for visual defects such as bent or broken cases, controls, switches, displays or connectors. Contact the factory and/or local representative immediately for instructions on handling damaged equipment.

A.2. Make sure all packing material is removed before any attempt is made to assemble or start up the equipment.

III.B. GENERAL PRECAUTIONS

B.1. Do not operate the Dry Spirometer on any voltage other than specified.

B.2. The unit must be operated only when the power cord is plugged into a "U" ground receptacle.

B.3. Disconnect all cables in the event the plug-in module must be removed.

III.C. SET-UP AND PREPARATION

C.1. The Dry Spirometer is shipped as a complete unit nearly ready for operation.

C.2. Make sure all packing materials have been removed including the rubber stopper inserted in the breathing tube adapter.

C.3. Locate the breathing tube and a disposable mouthpiece. Insert the mouthpiece into one end of the breathing tube; then attach the other end to the breathing tube adapter as shown in Figure 1.

C.4. Always use the Dry Spirometer on a relatively flat surface. The unit must not be allowed to tip up or down. To insure proper performance, always adjust the leveling screw at the front end of the unit until the small bubble

level at the rear of the unit is centered. This procedure is illustrated in Figure 3.

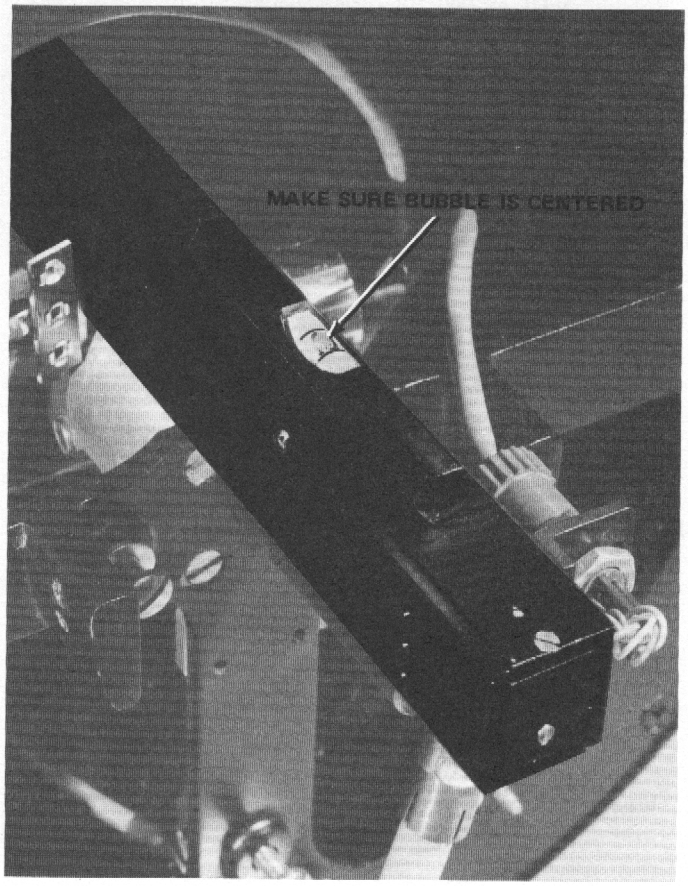

Figure 3 - Proper Leveling of Dry Spirometer

CAUTION: If at any time, the Dry Spirometer is moved to a different location, always replace the rubber stopper (#7 size) in the breathing tube adapter to prevent violent motion of the piston and seal. Violent motion may cause the seal to become folded resulting in excessive breathing resistance. Section VIII contains the corrective procedure should this ever happen.

NOTE: The remaining instructions in this section pertain to the set-up of a Dry Spirometer equipped with a Basic Module and Battery Powered Power Supply 06521. Refer to Figures 5 and 15.

C.5. Connect the cable with the 5-pin connector on one end to the **SPIROMETER POT** connector on the back of the Basic Module. The other end is connected to the power supply.

C.6. The cable from the power supply (equipped with a banana plug) is connected to an external recording device. The spirometer volume output signal is calibrated by adjusting the power supply potentiometer. A Collins 1 Liter Syringe may be incorporated, and, if a recorder with a calibrated input is used, the potentiometer may be adjusted until the desired deflection (1 liter) is observed on the recorder.

IV. OPERATION

IV.A. CONTROLS, CONNECTORS AND DISPLAY

The function of each control, connector and display is described briefly in the following sections. Where more information is desired, another section of this manual or the manufacturer's manual (where applicable) may be referenced, as necessary.

A.1. Basic Module - Front Panel (Figure 4)

a. Bell Position Switch

To move the spirometer bell **IN**, the lever switch is held up and, to move the bell **OUT**, it is held down. When released, the switch automatically returns to the center position (off).

A.2. Basic Module - Rear Panel (Figure 5)

a. Spirometer Potentiometer Connector

The input signal from the Battery Powered Power Supply is connected here at pins **A (+)** and **H (−)**. Also, the output signal from the linear motion potentiometer used to drive an external recording device or computer is taken from pin **B (ARM)**.

b. Volume Input Connector

This 9-pin connector allows for the **INPUT** of the volume signal from the spirometer potentiometer and also provides the drive voltage for the bell positioning circuit.

c. AC Line Fuse

The ¼ amp fuse provides over-current protection.

A.3. Volume Module - Front Panel (Figure 6)

a. Power Switch and Indicator

This switch applies **POWER** to the module and the LED

indicates that power is **ON**.

b. Digital Display
The relative spirometer volume is shown by the digital display which varies from 0.00 to about 8.60. A change of 100 counts equals a one liter change in spirometer volume when the BTPS knob is set to 37°C. When the display reads 0.00, the bell is toward the front of the unit.

c. Bell Position Switch
This switch functions the same as on the Basic Module (see paragraph IV.A.1.a.).

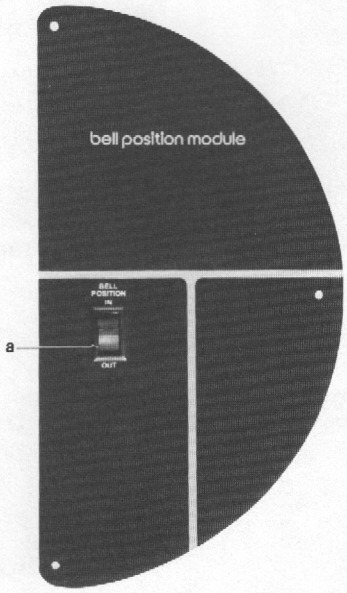

Figure 4 - Basic Module - Front Panel

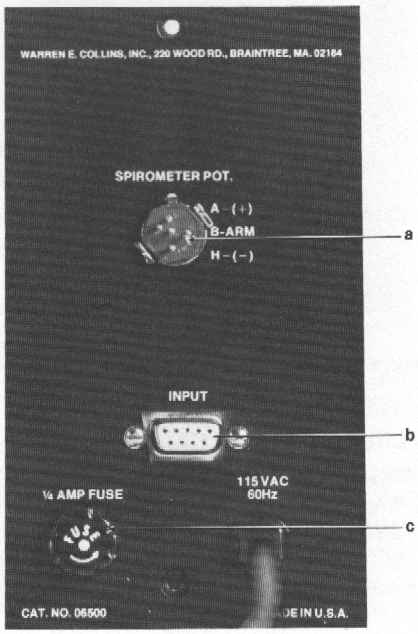

Figure 5 - Basic Module - Rear Panel

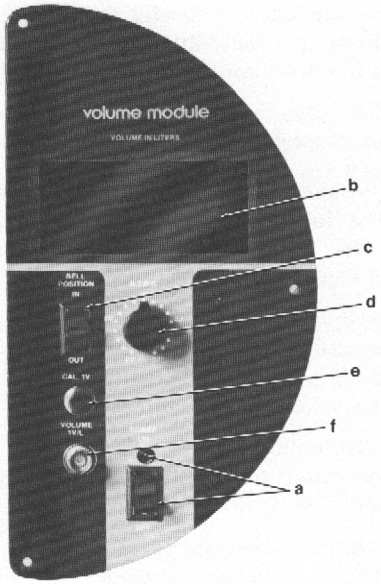

Figure 6 - Volume Module - Front Panel

d. BTPS Correction Control
Manual correction of **BTPS** is provided for temperatures between 17°C and 37°C. Adjustment of this control prior to testing corrects the output signal to BTPS conditions eliminating the need for correction during calculations.

e. Volume Calibration Switch
This momentary push button switch provides a 1 liter (1 volt) volume reference signal used as an aid during external X-Y-T recorder calibration.

f. Volume Output Connector
The BNC connector provides a signal directly proportional to the spirometer volume.

A.4. Volume Module - Rear Panel (Figure 7)

a. Volume Calibration Potentiometer
This adjustable trim potentiometer allows for the calibration of the spirometer volume signal when the bell is at its maximum displacement. It is factory set and should not be touched.

b. Volume Zeroing Potentiometer
This adjustable trim potentiometer allows for the calibration of the spirometer volume signal when the bell is at its minimum displacement. It is factory set and should not be touched.

c. Volume Output Connector (1V/L)
The same volume signal available at the front panel is available at this BNC connector.

d. $\overline{\text{Volume Output}}$ Connector
When the Dry Spirometer is used with a computerized system, the input signal for the computer interface is taken from this BNC connector. The signal is inversely proportional to the signal used to drive an external recorder and is not BTPS corrected.

e. Volume Input Connector
This 9-pin connector allows for the **INPUT** of the volume signal from the spirometer potentiometer and also provides the drive voltage for the bell positioning circuit.

f. AC Line Fuse
The ¾ amp fuse provides over-current protection.

A.5. Flow-Volume Module - Front Panel (Figure 8)
NOTE: The following controls are in addition to those found on the Volume Module Front Panel (see Section IV.A.3 and Figure 6).

a. Timing Pulses Switch
When actuated, timing pulses occurring at 1 second intervals (½ second on request) are summed with the flow output signal during expiration.

b. Flow Calibration Switch
This momentary push button switch provides a 2 liter per second (1 volt) flow reference signal.

c. Flow Output Connector
The BNC connector provides a signal directly proportional to the flow rate.

A.6. Flow-Volume Module - Rear Panel (Figure 9)
NOTE: The following controls are in addition to those found on the Volume Module Rear Panel (see Section IV.A.4 and Figure 7).

a. Flow Output Connector (0.5V/L/SEC)
The same flow signal available at the front panel is available at this BNC connector.

b. Flow Calibration Potentiometer
This adjustable trim potentiometer allows for the calibration of the spirometer flow signal. It is factory set and should not be touched.

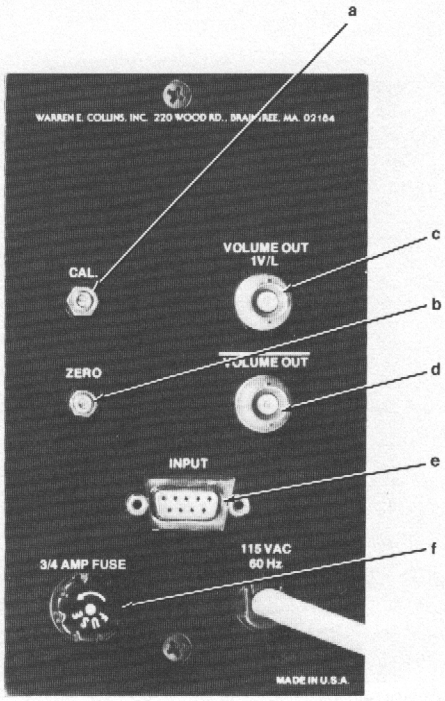

Figure 7 - Volume Module - Rear Panel

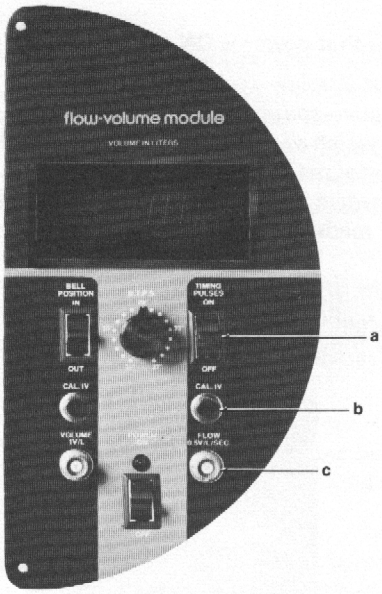

Figure 8 - Flow-Volume Module - Front Panel

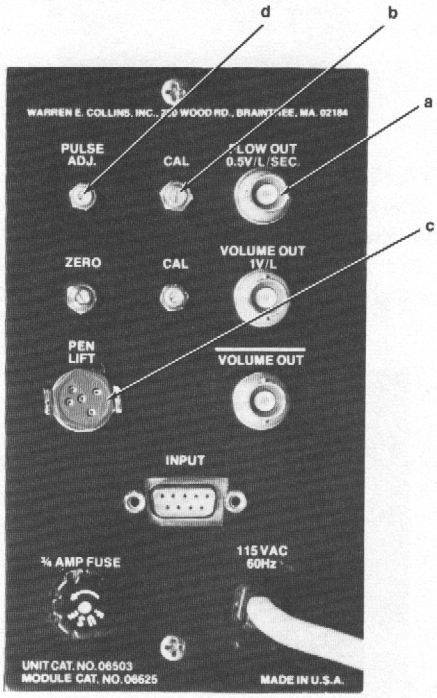

Figure 9 - Flow-Volume Module - Rear Panel

c. Pen Lift Connector
Utilizing the signals available here and the X-Y-T recorder's remote pen lift capability, a flow-volume loop with timing pulses may be recorded without the usual trace "glitches." At the instant of a generated pulse, the recorder pen will lift momentarily leaving a small blank space in the recorded loop.

d. Pulse Height Adjustment Potentiometer
When flow-volume loops are recorded with the usual

recorded timing pulses, this potentiometer is adjusted until the positive displacement of the "glitch" is satisfactory to the user.

A.7. Direct Writing Recorder (Figure 10)

a. Speed Selector Switch

This two position switch selects one of the two paper speeds, either 320 mm/min or 1280 mm/min.

b. Remote Power Switch

The hand held switch is provided with a long cord and is used to turn the recorder's paper drive mechanism on and off.

c. AC Line Fuse

The ½ amp fuse provides over-current protection.

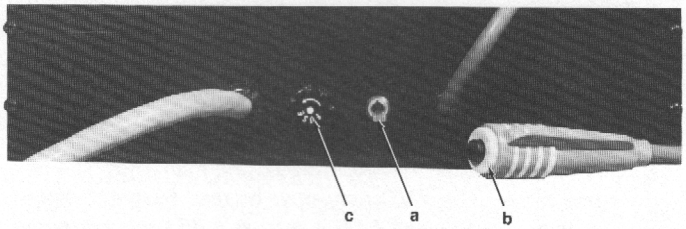

Figure 10 - Direct Writing Recorder

A.8. X-Y-T Recorder - Front Panel (Figure 11)

a. Input Terminals

Each axis has an input terminal labeled **HI-LO** and accepts banana plug connectors (supplied). When connections are made, the side of the connector marked **GROUND** or **GND** is inserted into the **LO** side.

b. Polarity Switches (-RT, +RT, -UP, +UP)

These switches provide polarity reversal for the input signal on each axis.

c. Response Switch

This switch is provided on both axes. The **FAST** position is used when recording flow-volume loops or spirograms.

d. Zero Controls

These two potentiometers, one for each axis, adjust the pen's zero position on the chart paper.

e. Zero Check Switches

When either switch is depressed, the input signal to that axis is disconnected and the pen returns to its zero position.

f. Range Switches

The selector switch for each axis has five calibrated positions ranging from **.05V/CM** to **1.0V/CM**.

g. Vernier Controls

In addition to the Range switches, each axis is equipped with this control. It alters the sensitivity from that specified by the Range switch and is generally left fully clockwise (calibrated).

h. Time Base Switch

This three position switch allows the time base portion of the recorder to be turned **OFF** or to sweep either the **X** or **Y** axis.

i. Sweep Rate Switch

This switch allows selection of six sweep rates ranging from **.25 SEC/CM** to **50 SEC/CM.**

j. Reset/Start Switch

This momentary switch has two positions. The **RESET** position stops the sweep cycle, lifts the pen and resets it to the original starting position. In the **START** position, the pen drops and sweeps the chart paper on the X or Y axis at the selected rate.

In systems where the Dry Spirometer is used with a Survey Computer, these two functions are computer controlled so this switch is not used unless the recorder is operated manually.

k. Line Switch

This switch applies power to the recorder.

l. Chart Switch

In the **HOLD** position, the chart paper is automatically held to the plotting surface. The paper is removed by moving the switch to **RELEASE**.

m. Servo Switch

The pen position can be adjusted manually when the switch is set to **STAND BY**. When tests are to be recorded, the switch is left in the **ON** position.

n. Pen Switch

The pen is raised from the chart paper when in the **LIFT** position. The **RECORD** position drops the pen. This switch is always left in the **LIFT** position when the recorder is under computer control. Use of this switch when the recorder is used manually is described in Section VI.

V. RECORDING TESTS USING DIRECT WRITING RECORDER

V.A. GENERAL

A.1. If necessary, load a roll of paper into the recorder as shown in Figure 12. Also, make sure the disposable recording pen is generating a clean, legible trace. Replace the pen as necessary.

A.2. Because the recorder is a mechanical, direct recording unit, it is not possible to incorporate a BTPS correction factor into the recorded traces. Therefore, the Volume and/or Flow-Volume Module BTPS control is not used. Additionally, it is important to remember to enter the BTPS factor into all calculations.

A.3. Specific calculation instructions for ventilation tests are not included in this manual. The booklet *Clinical Spirometry* contains a thorough explanation of those calculations.

V.B. FORCED VITAL CAPACITY (FVC) TEST

NOTE 1 : On units with a **POWER** switch, turn it to the **ON** position.

NOTE 2 : The first FVC procedure outlined in Steps B.1. - B.8, allows the use of the **BTPS** control (if equipped).

B.1. Move the **BELL POSITION** switch to **IN**. Wait until the

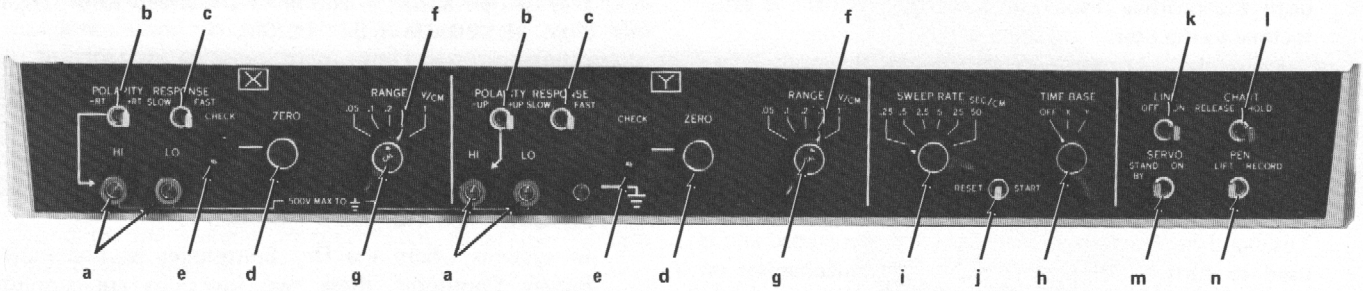

Figure 11 - X-Y-T Recorder - Front Panel

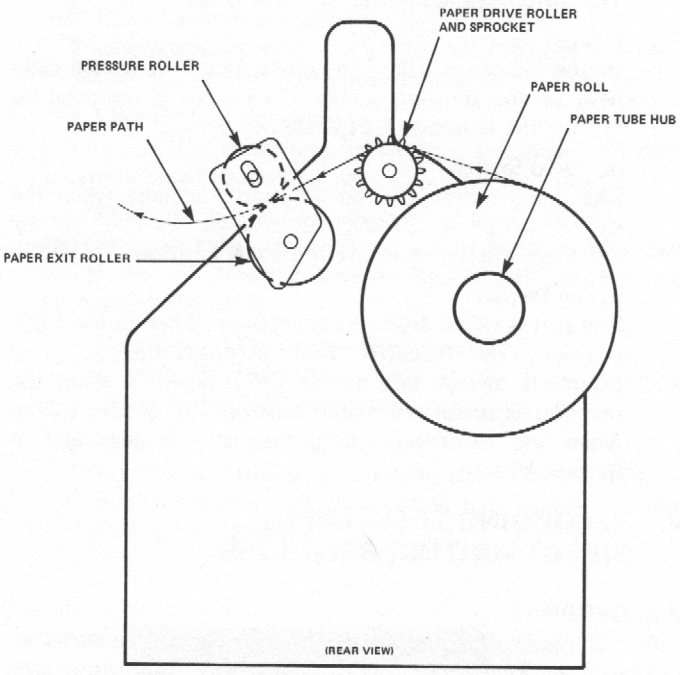

Figure 12 - Loading Paper Into Direct Writing Recorder

digital display reads **0.00**. On units without a display, use the location of the recorder pen as a guide. When the pen reaches the near edge of the paper, the bell is at the proper position.

B.2. On units with a **BTPS** control, adjust the temperature setting for the current room temperature reading.

B.3. Attach a noseclip to the patient and place a clean, disposable mouthpiece into the breathing tube.

B.4. Using the remote power switch, turn on the recorder (high speed) and place the pen in the record position.

B.5. For a forced vital capacity utilizing this procedure, the test can be explained to the patient as follows:

a. Perform maximum inspiration.
b. Hold breath.
c. Place mouthpiece firmly in mouth.
d. Expire as rapidly and completely as possible.
e. Remove mouthpiece

B.6. During each test, the patient must be encouraged to obtain a maximum effort.

B.7. At the end of a test, turn off the recorder and raise the pen.

B.8. When the patient has completed the maneuver, the bell does not move. The FVC may now be read from the digital display (e.g., a reading of **4.65** is read as 4.65 liters corrected to BTPS) or measured later from the tracing (not corrected to BTPS).

NOTE: This second FVC procedure (Steps B.9. - B.11.) is slightly easier from the patient's point of view, but a direct reading from the digital display is not possible.

B.9. Move the **BELL POSITION** switch until the digital display reads about **4.50**. On units without a display, use the location of the recorder pen as a guide. When the pen reaches the middle of the paper, the bell is at the proper position. Prepare the patient as before and start the recorder (high speed).

B.10. This second FVC procedure may be explained as follows:

a. Place mouthpiece firmly in mouth.
b. Perform maximum inspiration.
c. Expire as rapidly and completely as possible.
d. Remove mouthpiece.

B.11. Since the bell is at some undetermined point at the beginning of this procedure, it is impossible to read the corrected FVC directly from the digital display. Instead, the tracing from the recorder must be analyzed.

B.12. Following each test, flush the spirometer by moving the bell in and out several times. The **BELL POSITION** switch may be used for this procedure.

B.13. Now, perform two or three more tests, or until consistent results are obtained. If large discrepancies occur, the patient probably does not fully understand the test. Explain the procedure again and retest.

V.C. INSPIRATORY VITAL CAPACITY (IVC) TEST

NOTE: On units with a **POWER** switch, turn it to the **ON** position.

C.1. Move the **BELL POSITION** switch until the digital display reads about **5.50**. On units without a display, use the location of the recorder pen as a guide. When the pen reaches about the middle of the paper, the bell is at the proper position.

C.2. Attach a noseclip to the patient and place a clean, disposable mouthpiece into the breathing tube.

C.3. Turn on the recorder (slow speed), place the pen in the record position and have the patient perform the IVC test.

C.4. As with the forced vital capacity test, the patient must always be encouraged to obtain a maximum effort.

C.5. At the end of a test, turn off the recorder and raise the pen. The IVC may now be calculated from the tracing.

C.6. Perform Steps B.12. and B.13. as explained in Section V.B.

V.D. MAXIMAL VOLUNTARY VENTILATION (MVV) TEST

NOTE: On units with a **POWER** switch, turn it to the **ON** position.

D.1. Move the **BELL POSITION** switch until the digital display reads about **4.50**. On units without a display, use the location of the recorder pen as a guide. When the pen reaches the middle of the paper, the bell is at the proper position.

D.2. Attach a noseclip to the patient and place a clean, disposable mouthpiece into the breathing tube.

D.3. Turn on the recorder (slow speed), place the pen in the record position and have the patient perform the MVV test.

D.4. As with the other tests, the patient must always be encouraged to obtain a maximum effort.

D.5. At the end of a test, turn off the recorder and raise the pen. The MVV may now be calculated from the tracing.

D.6. Perform Steps B.12, and B.13. as explained in Section V.B.

VI. RECORDING TESTS USING X-Y-T RECORDER

VI.A. GENERAL

A.1. The testing procedures using the X-Y-T Recorder are identical to those when the Direct Writing Recorder is used. However, this recorder uses electronic signals generated by the plug-in modules necessitating the use of external cables.

A.2. Since this recorder utilizes an electronic rather than mechanical signal, it is possible to incorporate a BTPS correction factor into the recorded traces. The **BTPS** control on the Volume and/or Flow-Volume Module is adjusted to the room temperature before a test is conducted. This convenience eliminates one step in all calculations.

NOTE 1: When the Dry Spirometer is used with a Basic Module, it is not possible to record flow-volume loops. Additionally, spirograms may only be recorded if the Battery Powered Power Supply 06521 is used to excite the linear motion potentiometer. This is described in Section III.C. and Figures 5 and 15.

NOTE 2: Refer to Figure 11 for identification of the X-Y-T Recorder's front panel controls.

VI.B. FLOW-VOLUME LOOPS

B.1. Connect a cable from the Flow-Volume Module **VOLUME OUT 1V/L** BNC connector to the recorder's **X** axis **HI-LO** connectors. Connect another cable from the **FLOW OUT 0.5V/L/SEC.** BNC connector to the **Y** axis **HI-LO** connectors. The side of the banana plug marked **GROUND** or **GND** must go to the **LO** side of the **HI-LO** connectors. Additionally, the connectors on either the front or rear panel may be used.

B.2. If one second timing impulses are desired on the flow-volume loop, push up the **TIMING PULSES** switch during maximum inspiration prior to forced expiration. If timing pulses are not desired, leave this switch in the down position. When the automatic pen lift feature is utilized, a cable must be connected to the recorder's rear panel connector and the **PEN LIFT** connector at the rear of the Flow-Volume Module.

B.3. Set the recorder controls as follows:

LINE switch to **ON**
PEN switch to **LIFT**
TIME BASE switch to **OFF**
SERVO switch to **STANDBY**
RESPONSE switches to **FAST**

B.4. Move the **CHART** switch to **RELEASE**, place a piece of clean chart paper on the plotting surface, then move the switch to **HOLD**. Move the **SERVO** switch to **ON**.

B.5. The **X** and **Y** axis **POLARITY** switches can be set up to either + or − when a flow-volume loop is recorded depending upon the operator's preference. The sample flow-volume loop, shown in Figure 13 was recorded with both **POLARITY** switches set to +.

B.6. Set the **X** and **Y** axis **RANGE** selectors to **.5V/CM** or as desired for each patient. When a sick or elderly patient is tested, it may be necessary to change this setting to maintain an adequate pen deflection (8-10 cm).

B.7. Move the spirometer bell to mid-position and adjust the pen's starting position as desired by turning the **X** and/or **Y** axis **ZERO** controls.

B.8. Attach a noseclip to the patient. Place a clean, disposable mouthpiece into the breathing tube and into the patient's mouth, then allow him to breathe normally. The pen will move around slightly as the patient breathes, reflecting his tidal volumes.

B.9. Have the patient perform a Forced Vital Capacity

(FVC) test as described in Section V.B. Immediately before the maneuver, move the PEN switch to RECORD. The pen drops and the flow-volume loop is recorded. The inspiratory phase of the flow-volume loop will not begin at RV (the loop will not be closed) unless the subject performs a maximal inspiration required for the FVC maneuver.

B.10. When the test is concluded, remove the patient. With the **PEN** switch in the **RECORD** position, inscribe a zero flow line through the flow-volume loop by turning the **X** axis **ZERO** control. Return the **PEN** switch to the **LIFT** position.

B.11. Additional loops may be recorded by repositioning the pen to a clean area of the chart paper as described in Step B.7.

VI.C. SPIROGRAMS

C.1. Connect a cable from the Flow-Volume Module **VOLUME OUTPUT** BNC connector to the recorder's **Y** and **HI-LO** connectors. No connection is made to the **X** axis. The connector on either the front or rear panel may be used.

C.2. Set all controls as before (Steps VI.B.3.-B.7.) except move the **TIME BASE** switch to **X** and set the **SWEEP RATE** selector to **.5 SEC/CM** or as desired. Changing this setting merely expands or compresses the spirogram.

C.3. The position of the **TIMING PULSES** switch is disregarded when recording spirograms because the flow output of the Flow-Volume Module is not utilized.

C.4. The **Y** axis **POLARITY** switch can be set to either + or – depending upon the operator's preference. The sample spirogram, shown in Figure 14, was recorded with this switch in the – position. Notice that end expiration is at the bottom of the tracing.

VI.D. COMPUTERIZED OPERATION OF DRY SPIROMETER

D.1. Computerized operation is very similar to manual operation. For computerized testing, the cable at the rear of the module (VOLUME OUT) is connected to the computer interface.

D.2. Refer to the manual included with your computer system for more detailed operating instructions.

VI.E. FLOW-VOLUME LOOP ANALYSIS

E.1. The flow-volume loop (Figure 13) consists of two main portions – the inspiratory phase and the expiratory phase which are separated by a zero flow axis. Flow rates and volumes can be determined from these two phases.

E.2. Flow

a. Peak Flow

Peak expiratory flow is the point of maximum flow during expiration. This is measured by establishing point **A** on the flow-volume loop which is the maximum positive point. Peak flow is measured from the zero flow line to point **A**. Record this dimension in centimeters. Peak flow is measured from the formula:

Peak flow (L/sec) = no. of div. (in cm) x Y sensitivity x flow calibration factor

b. Peak Inspiratory Flow (PIF)

Peak inspiratory flow is the point of maximum flow during inspiration. This is measured by establishing point **B** on the flow-volume loop which is the maximum negative point. Peak inspiratory flow is measured from the zero flow line to point **B**. Record this dimension in centimeters. Peak inspiratory flow is measured from the formula:

PIF (L/sec) = no. of div. (in cm) x Y sensitivity x flow calibration factor

c. Forced Expiratory Flow ($FEF_{25, 50, 75\%}$)

In order to determine FEF, establish point **Q** between points **E** and **F**. For $FEF_{25\%}$, point **Q** is ¼ of the way between **E** and **F**, for $FEF_{50\%}$, point **Q** is ½ of the way between **E** and **F**, and for $FEF_{75\%}$, point **Q** is ¾ of the way between **E** and **F**. Construct a perpendicular line through point **Q** which intersects both the inspiratory and expiratory curves, establishing points **C** and **D**. FEF is measured from point **Q** to point **C**. Record this dimension in centimeters. FEF is determined from the formula:

FEF (L/sec) = no. of div. (in cm) x Y sensitivity x flow calibration factor

d. Forced Inspiratory Flow (FIF)

FIF is determined by measuring the distance previously established from point **Q** to point **D**. FIF is determined by the formula:

FIF (L/sec) = no. of div. (in cm) x Y sensitivity x flow calibration factor

e. Forced Vital Capacity (FVC)

The forced vital capacity is the volume of gas expired after full inspiration; expiration being as rapid and complete as possible. This is measured by determining the distance in centimeters between points **E** and **F**. The vital capacity is determined by the formula:

FVC (L) = no. of div. (in cm) x X sensitivity x volume calibration factor

f. Timed Vital Capacity (FEV_T)

The timed vital capacity is the volume of gas exhaled over a given time during a complete forced expiration. These time intervals are generated by this system in one second intervals and are indicated by "glitches" or spaces along the expiration curve. In this instance, the one second timed vital capacity will be determined. Construct a perpendicular line to the **X** axis through the onset of the one second "glitch." Establish point **P** where this perpendicular line intersects the **X** axis. The timed vital capacity (FEV_1) is the volume measured between points **E** and **P**. Record this dimension in centimeters. The timed vital capacity is determined by the formula:

FEV_1 (L) = no. of div. (in cm) x X sensitivity x volume calibration factor

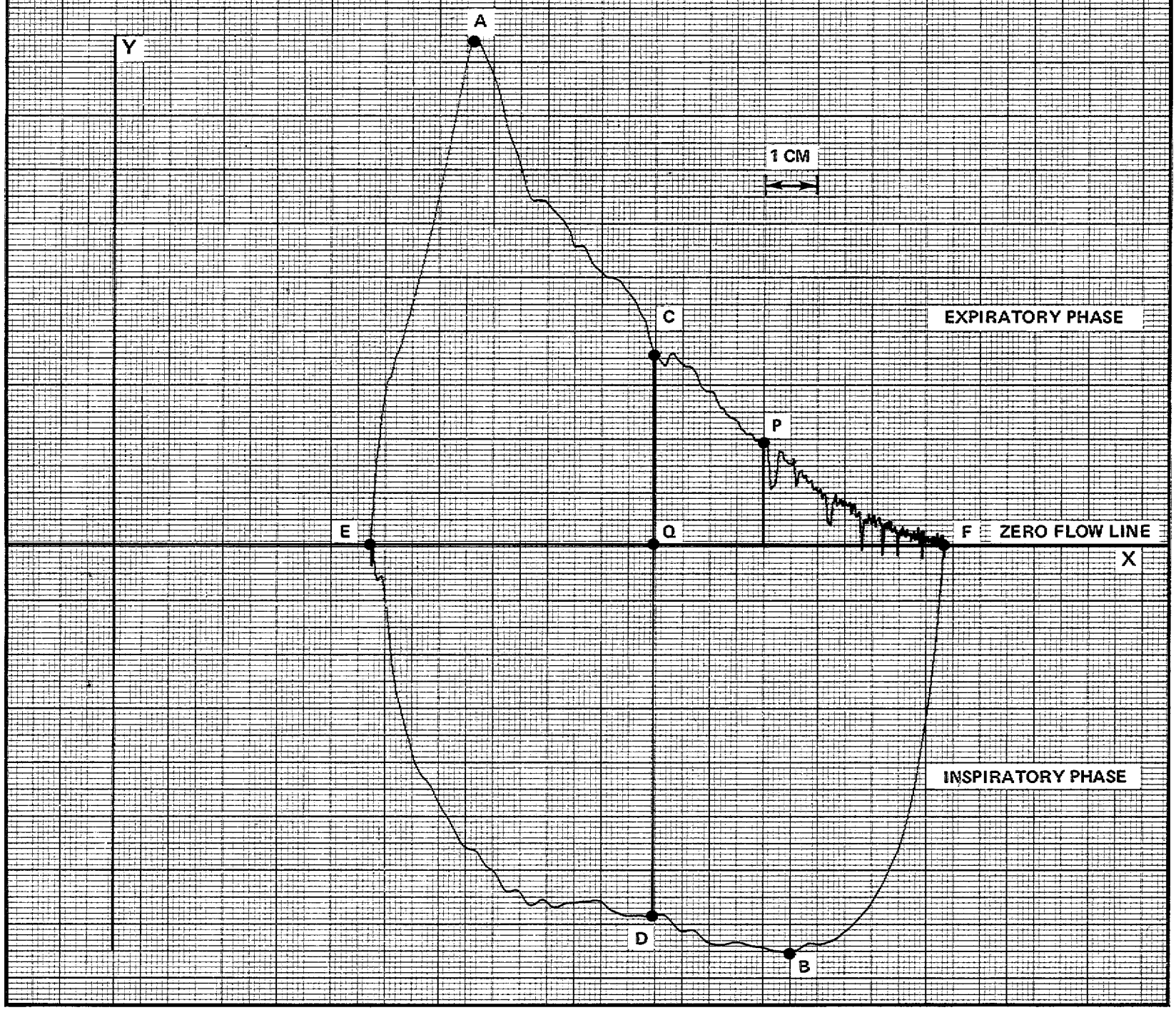

Figure 13 - Sample Flow-Volume Loop

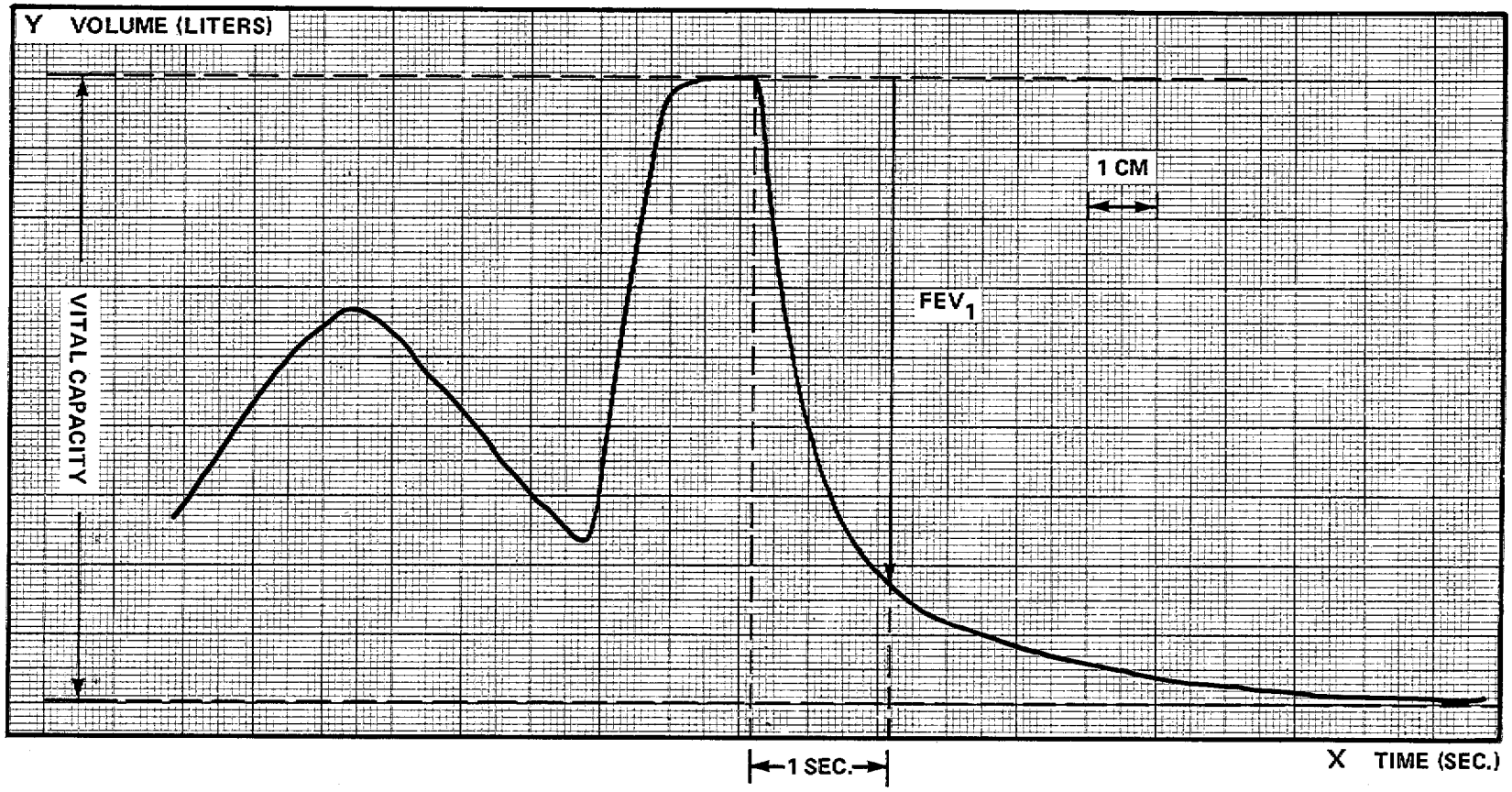

Figure 14 - Sample Spirogram

E.3. The flow and volume calibration factors for the Dry Spirometer are as follows:

Flow: 1 volt = 2 Liters/sec
Volume: 1 volt = 1 Liter

VI.F. SPIROGRAM ANALYSIS

F.1. Figure 14 is a typical spirogram recorded on the X-Y-T recorder. The X axis is time and the Y axis is volume. The same volume calibration used for the flow-volume loop analysis applies to spirogram analysis. A spirogram recorded on the direct writing recorder is analyzed similarly to the X-Y-T recorder tracing except all calculations must be corrected to BTPS. Additionally, this paper is currently printed with a millimeter grid. To simplify its use, a clear plastic overlay (Catalog No. 22110) is supplied which allows direct conversion to liters.

F.2. The booklet *Clinical Spirometry* contains detailed information concerning spirogram analysis.

VII. REPLACEABLE PARTS LIST

CATALOG NO.	ITEM
22234	Replacement breathing tube
22246	Breathing tube adapter
22401	Disposable cardboard mouthpieces (box of 100)
22939	Rubber tipped noseclip
22441	Sponge rubber refills for noseclip
22047	X-Y-T recorder paper (box of 100)
22055	Direct writing paper
22411	Disposable pen for direct writing recorder (red - package of five)
22413	Disposable pen for direct writing recorder (black - package of five)
22530	Disposable pen for X-Y-T recorder (red - package of three)
22528	Disposable pen for X-Y-T recorder (blue - package of three)
22110	Dry Spirometer overlay
22248	Replacement rear access air filter
----	BNC/Banana cable (2 required)

VIII. TROUBLESHOOTING AND MAINTENANCE

VIII.A. TROUBLESHOOTING

SYMPTOM	CHECK
Individual component does not respond	1. Line cord 2. Fuses 3. Defective or disconnected cables 4. Control settings
Breathing difficult or restricted	1. Piston or rubber seal*
No flow and/or volume signal from Flow-Volume Module or Volume Module	1. Connectors on front and rear panel 2. Banana connector on recorder 3. Spirometer potentiometer inside housing 4. Defective or disconnected cables
No direct writing recorder trace	1. Pen position 2. Disposable pen 3. Recorder motors and fuse 4. Remote, hand-held switch
Excessive X-Y-T recorder vibration	1. Recorder **RANGE** selectors 2. Cable connections
No X-Y-T recorder position capability	1. Recorder **LINE** switch 2. Recorder **RANGE** selectors 3. Recorder **SERVO** switch 4. Recorder AC line connection
No X-Y-T recorder trace	1. Cable connections 2. Switch on recorder in **RECORD** position 3. Disposable pen
X-Y-T recorder pen 'pegged' off paper	1. Recorder **RANGE** selectors 2. Recorder **ZERO** controls 3. Power off-lateral pen arm movement

*If the rubber stopper is not inserted into the breathing tube adapter when the Dry Spirometer is moved, violent motion of the piston may cause a fold to develop in the rubber seal. Should a fold be discovered, the easiest way to remove it is to use a compressed air source adjusted to a **MAXIMUM** pressure of **25-30** psi. Using higher air pressure certainly will cause the rubber seal to rupture. Use the following procedure:

a. Remove the three knurled knobs and spirometer cover to expose the piston and cylinder.

b. Adjust the air pressure source to 25-30 psi. A small nozzle should be connected to the air hose to direct the air flow.

c. Slowly move the piston back and forth manually while at the same time directing the compressed air evenly around the circumference of the piston (between the piston and cylinder). The air pressure creates a slight ballooning effect in the rubber seal which removes the fold as the bell is moved back and forth.

d. After the fold has been removed, apply a very small amount of talcum powder to the inner surface of the cylinder wall. Any excess should be removed.

e. Replace the front spirometer cover.

VIII.B. MAINTENANCE

B.1. At the end of each test, move the bell in and out to flush out old gas.

B.2. Disconnect the breathing tube from the front of the unit and allow any condensation to drain out.

B.3. The breathing tube should be cleaned frequently with detergent and water using a large, long handled, test tube brush.

B.4. For sterilization of the breathing tube only, a solution such as Cidex may be used, but follow the manufacturer's instructions. One-half hour in this solution is adequate and the tube should be allowed to thoroughly dry to help kill all bacteria. This method of sterilization may cause the tube to turn a harmless, yellow color.

B.5. Cold gas sterilization of the tube and spirometer mainframe may also be used. However, those parts must be aired for twenty-four hours after sterilization. In order for the spirometer mainframe to be sterilized, the three knurled knobs on the front panel must be removed to expose the internal components.

B.6. The disposable mouthpiece must be replaced whenever a new patient is tested.

B.7. Replace the rear access air filter (Cat. No. 22248) every three months or more frequently if the filter becomes soiled.

IX. SCHEMATIC DIAGRAMS AND PRINTED CIRCUIT BOARDS

PAGE NUMBER

IX.A. SCHEMATICS

IX.B. PRINTED CIRCUIT BOARDS AND PARTS LISTINGS

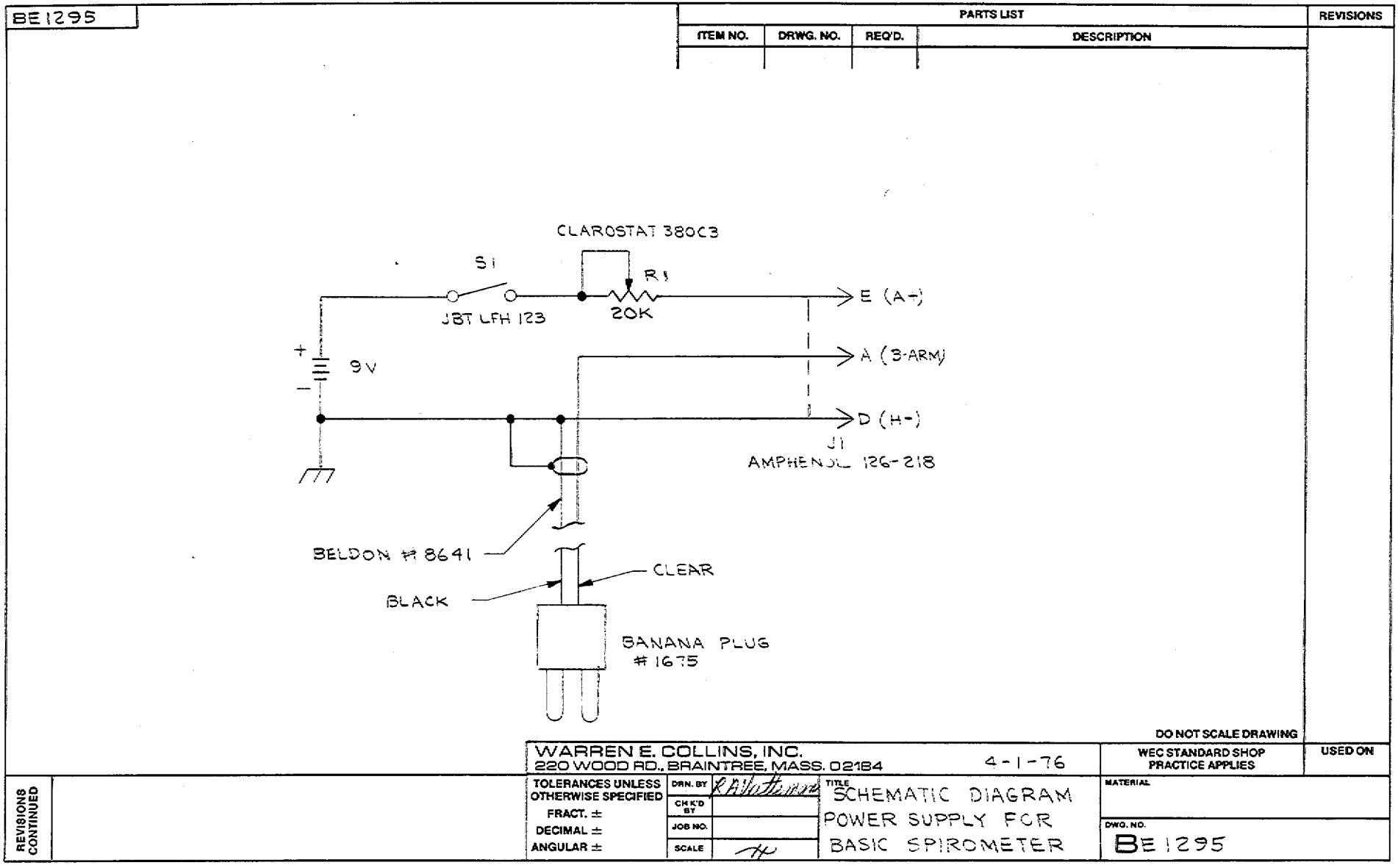

Figure 15 - Basic Dry Spirometer Power Supply Schematic

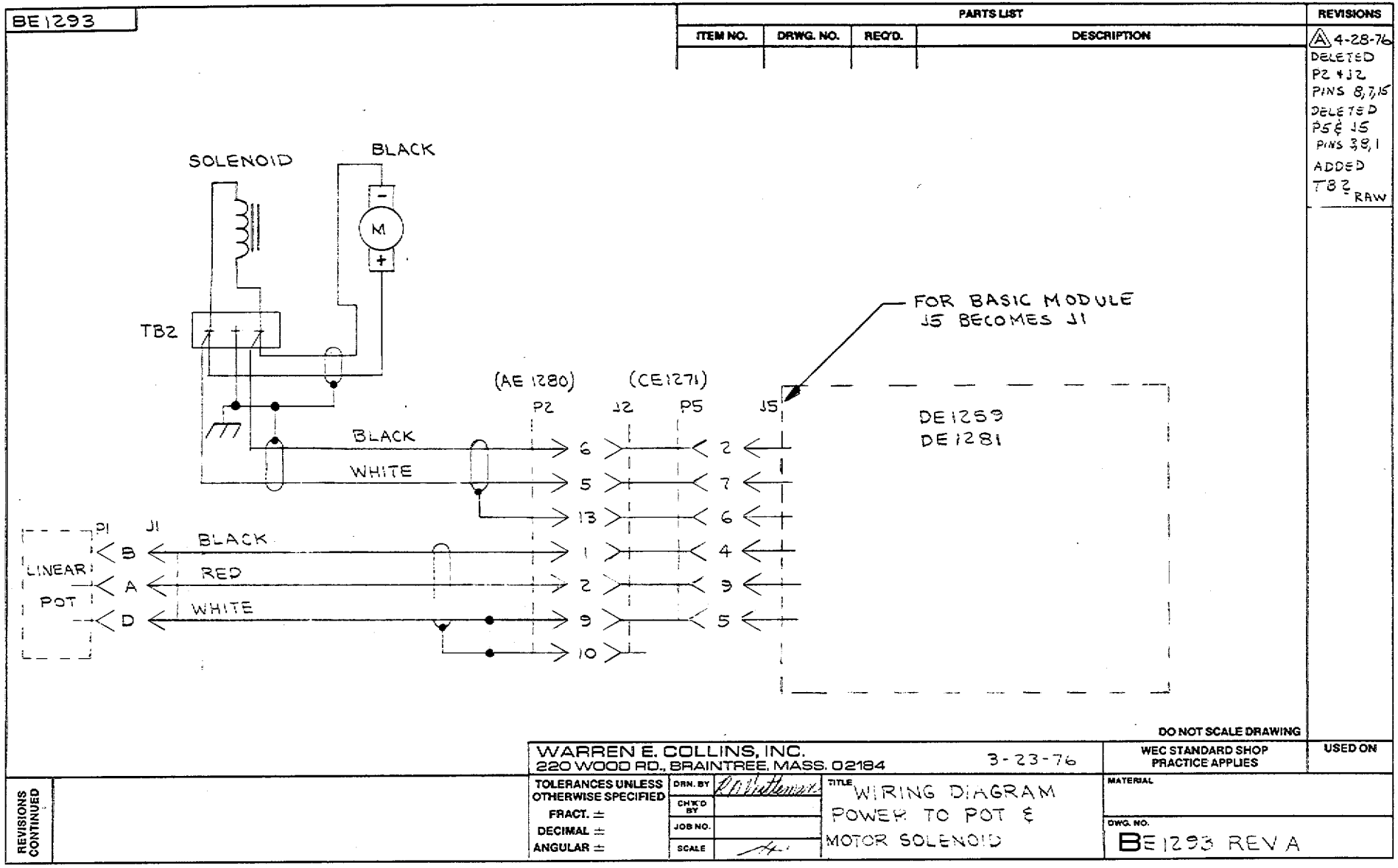

Figure 16 - Potentiometer and Motor Solenoid Power Supply Schematic

CE 1274

PARTS LIST			
ITEM NO.	DRWG. NO.	REQ'D.	DESCRIPTION

REVISIONS

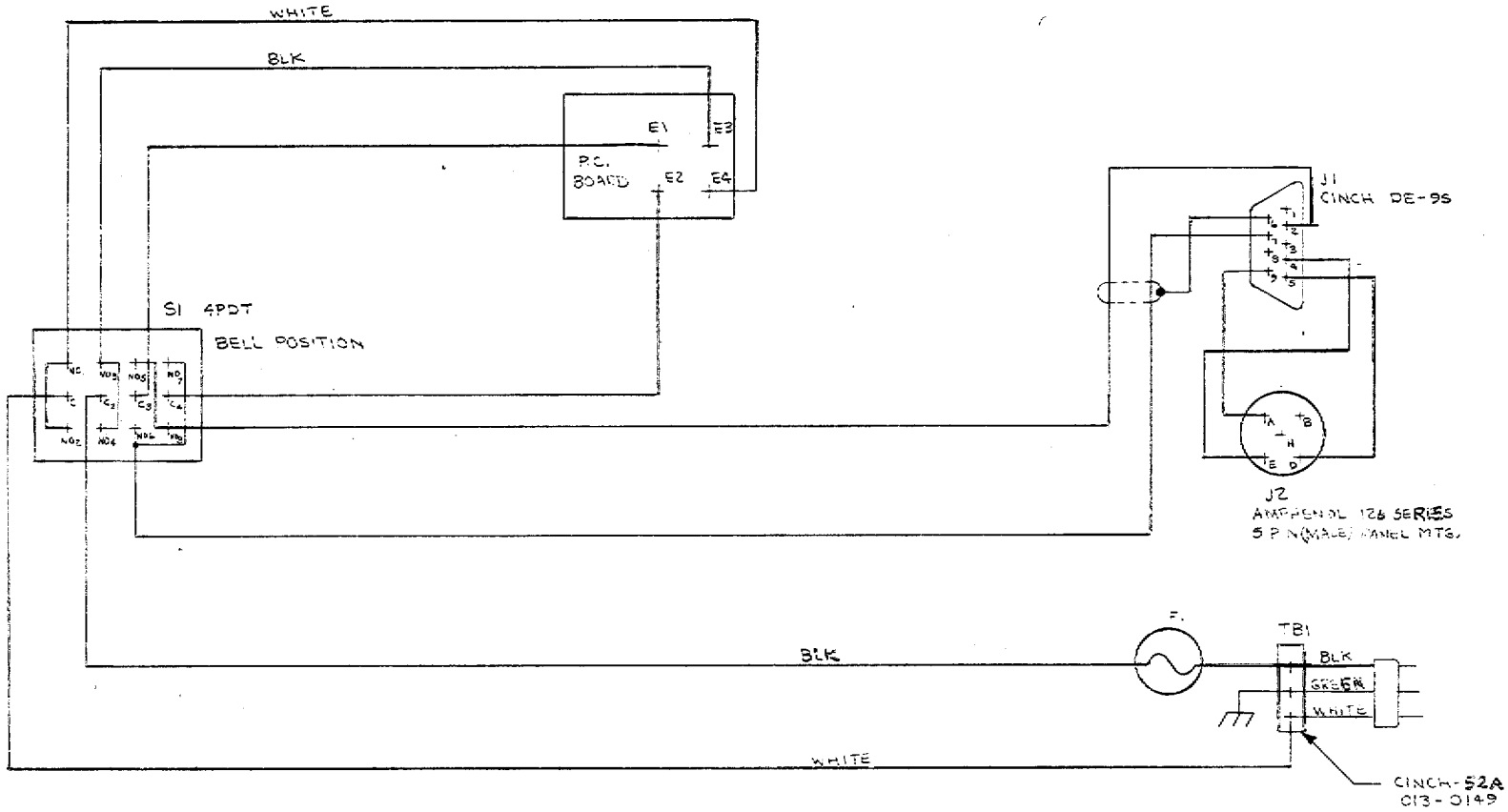

DO NOT SCALE DRAWING

WARREN E. COLLINS, INC.
220 WOOD RD., BRAINTREE, MASS. 02184

- 4 - 76

WEC STANDARD SHOP PRACTICE APPLIES

USED ON

TOLERANCES UNLESS OTHERWISE SPECIFIED
FRACT. =
DECIMAL =
ANGULAR =

DRW. BY
CHKD BY
JOB NO.
SCALE

TITLE
WIRING DIAGRAM
BASIC
DRY SPIROMETER

MATERIAL

DWG NO.
CE 1274

REVISIONS CONTINUED

BE 1326

PARTS LIST			
ITEM NO.	DRWG. NO.	REQ'D.	DESCRIPTION

REVISIONS

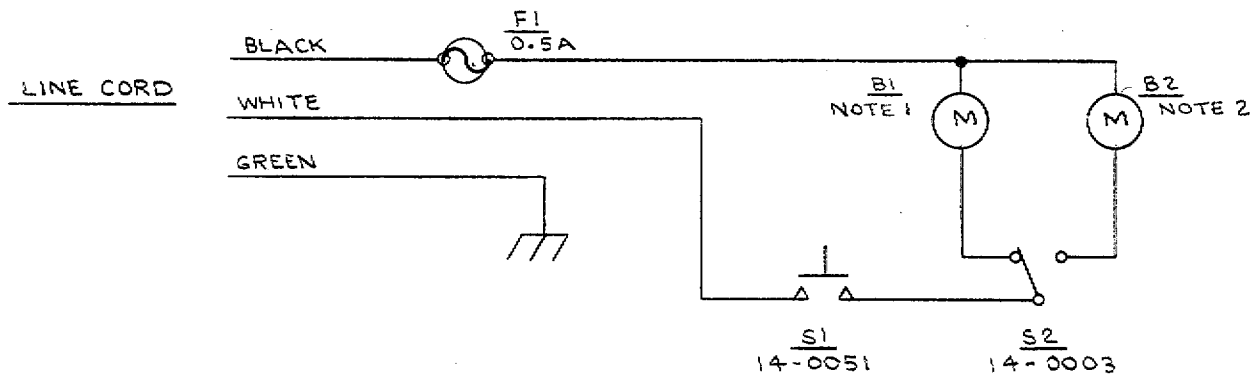

NOTES

1. CLOCK MOTOR, 1RPM, ONE WAY:
   DOMESTIC 110V, 60 Hz (025-012)
   FOREIGN 220V, 50 Hz (025-041)

2. CLOCK MOTOR, 4RPM, ONE WAY:
   DOMESTIC 110V, 60 HZ (025-014)
   FOREIGN 220V, 50 HZ (025-043)

DO NOT SCALE DRAWING

WARREN E. COLLINS, INC.
220 WOOD RD., BRAINTREE, MASS. 02184

3 JAN 77

WEC STANDARD SHOP PRACTICE APPLIES

USED ON

REVISIONS CONTINUED

TOLERANCES UNLESS OTHERWISE SPECIFIED
FRACT. ±
DECIMAL ±
ANGULAR ±

DRN. BY: G. LeCoste
CH'K'D BY
JOB NO.
SCALE

TITLE: WIRING DIAGRAM PAPER DRIVE DRY SPIROMETER

MATERIAL

DWG. NO. BE 1326

Figure 18 - Direct Writing Recorder Wiring Diagram

BE 1272

PARTS LIST			
ITEM NO.	DRWG. NO.	REQ'D.	DESCRIPTION

REVISIONS

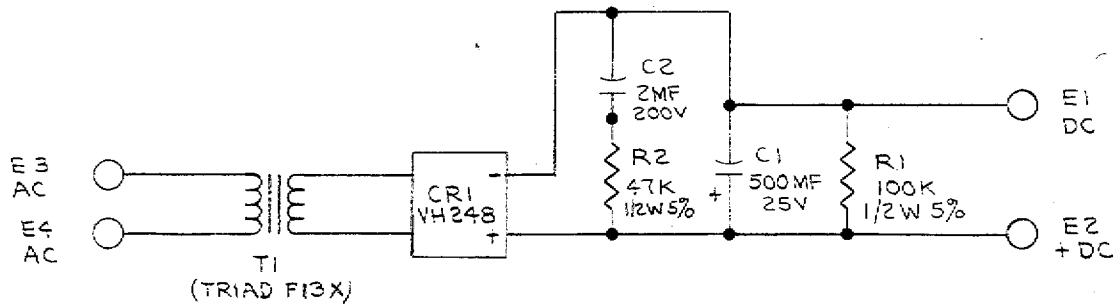

DO NOT SCALE DRAWING

WARREN E. COLLINS, INC.
220 WOOD RD., BRAINTREE, MASS. 02184

1-9-76

WEC STANDARD SHOP PRACTICE APPLIES

USED ON

REVISIONS CONTINUED

TOLERANCES UNLESS OTHERWISE SPECIFIED
FRACT. ±
DECIMAL ±
ANGULAR ±

DRN. BY
CH'K'D BY
JOB NO.
SCALE

TITLE
SCHEMATIC DIAGRAM
BASIC
DRY SPIROMETER

MATERIAL

DWG. NO.
BE1272

Figure 19 - Basic Module Schematic

DE1259

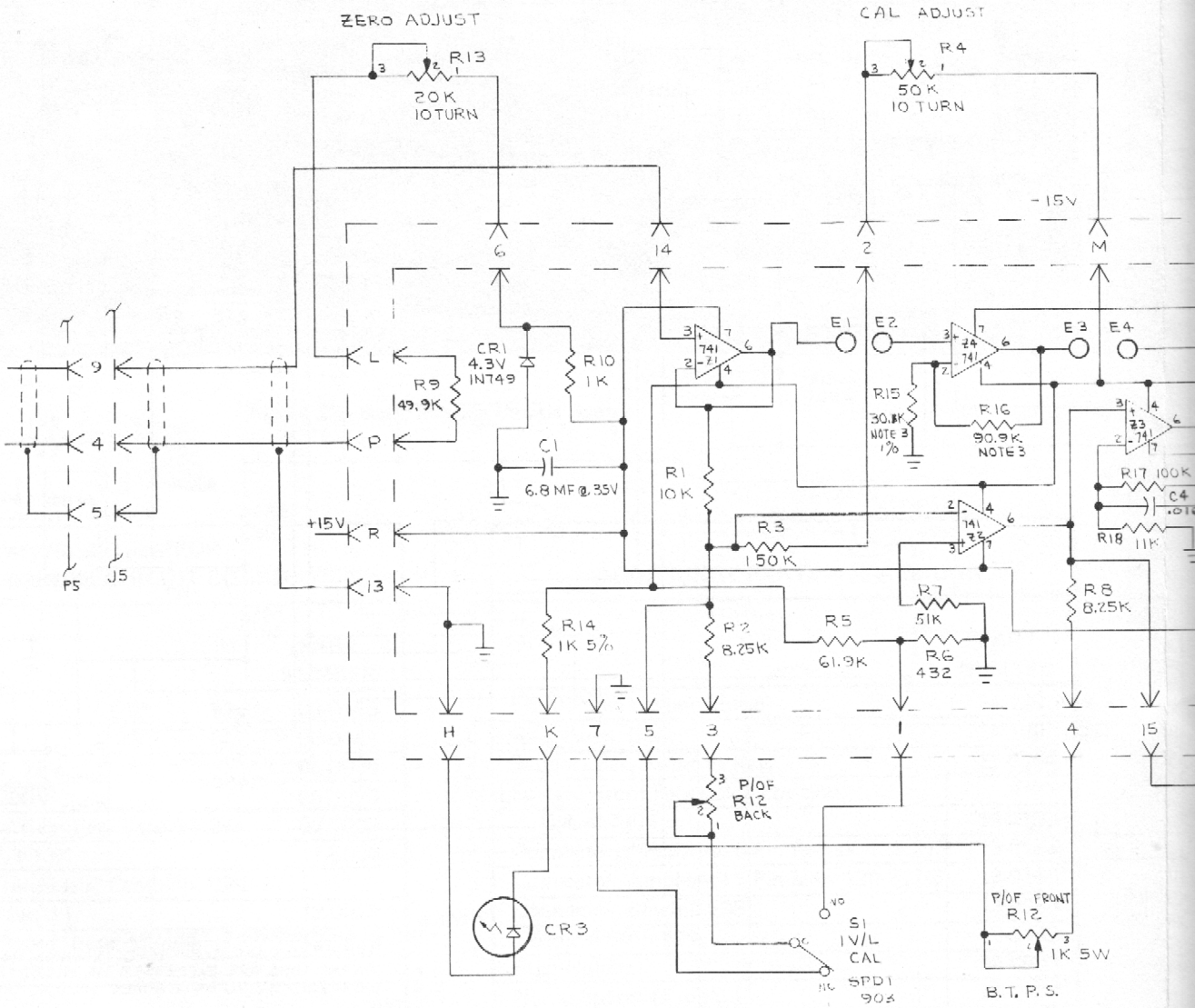

NOTES:

1. UNLESS OTHERWISE SPECIFIED
   ALL RESISTORS ARE EXPRESSED IN OHMS, 1/4W, ±1%
   ALL CAPACITORS ARE EXPRESSED IN MICROFARADS
2. E1 TO E2 AND E3 TO E4 EQUALS VOLUME OUT 400MV
   E1 & E4 EQUALS VOLUME OUT 100MV/LITER.
3. FOR $\overline{V_{OUT}}$ OF 286MV/V, R15 = 42.2K, R16 = 78.7K
   FOR $\overline{V_{OUT}}$ OF 572 MV/V R15 = 42.2K, R16 = 200K

REVISIONS CONTINUED

Figure 20 - Volume M

PARTS LIST			
ITEM NO.	DRWG. NO.	REQ'D.	DESCRIPTION

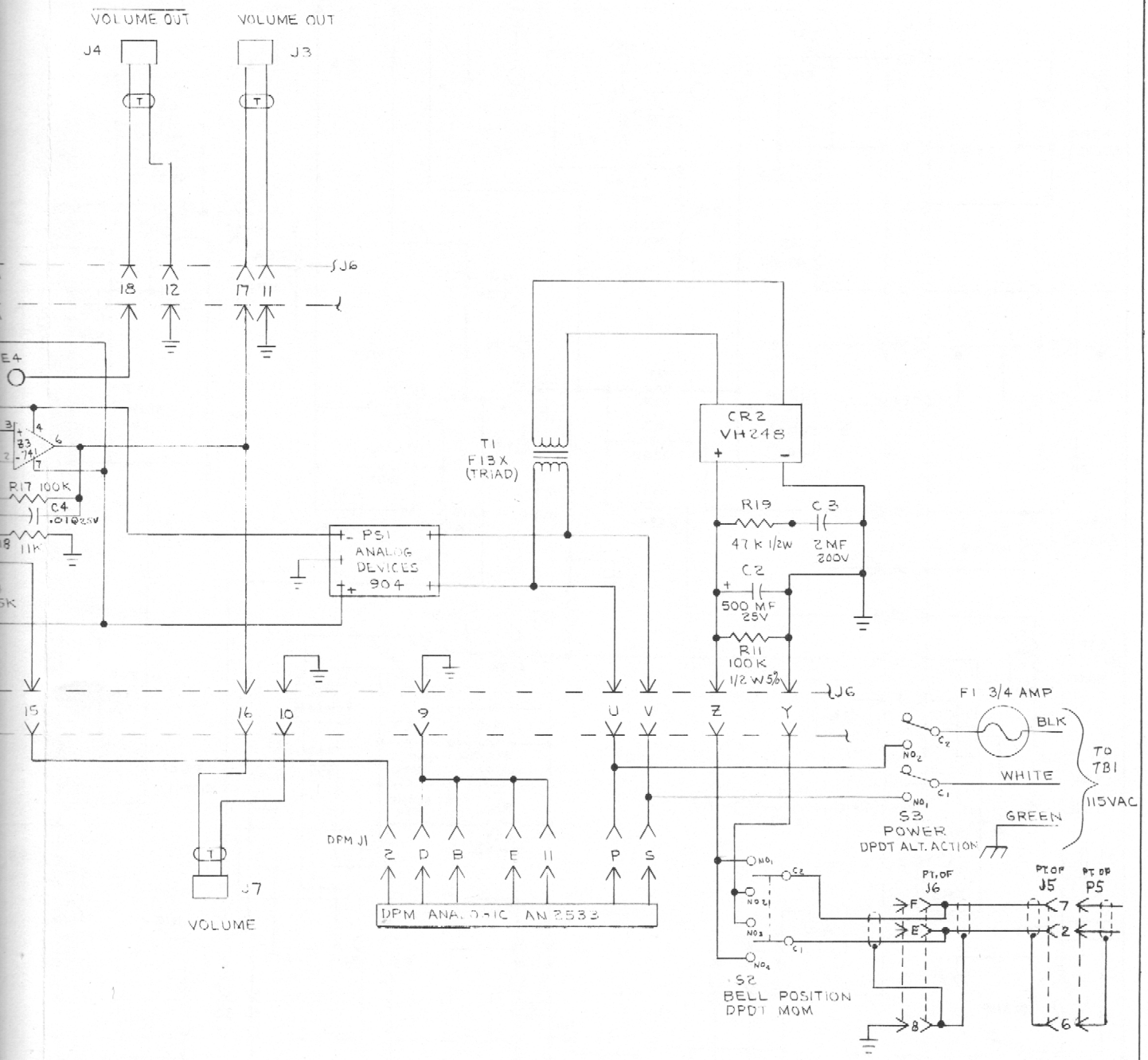

DO NOT SCALE DRAWING

WARREN E. COLLINS, INC. 220 WOOD RD., BRAINTREE, MASS. 02184	DATE 12-15-75	WEC STANDARD SHOP PRACTICE APPLIES
TOLERANCES UNLESS OTHERWISE SPECIFIED .XX ± .XXX ± ANGULAR ±	DRN. BY / CHK'D BY / JOB NO. / SCALE	TITLE SCHEMATIC DIAGRAM VOLUME DRY SPIROMETER
MATERIAL	DWG. NO. DE1259	REV. 4

olume Module Schematic

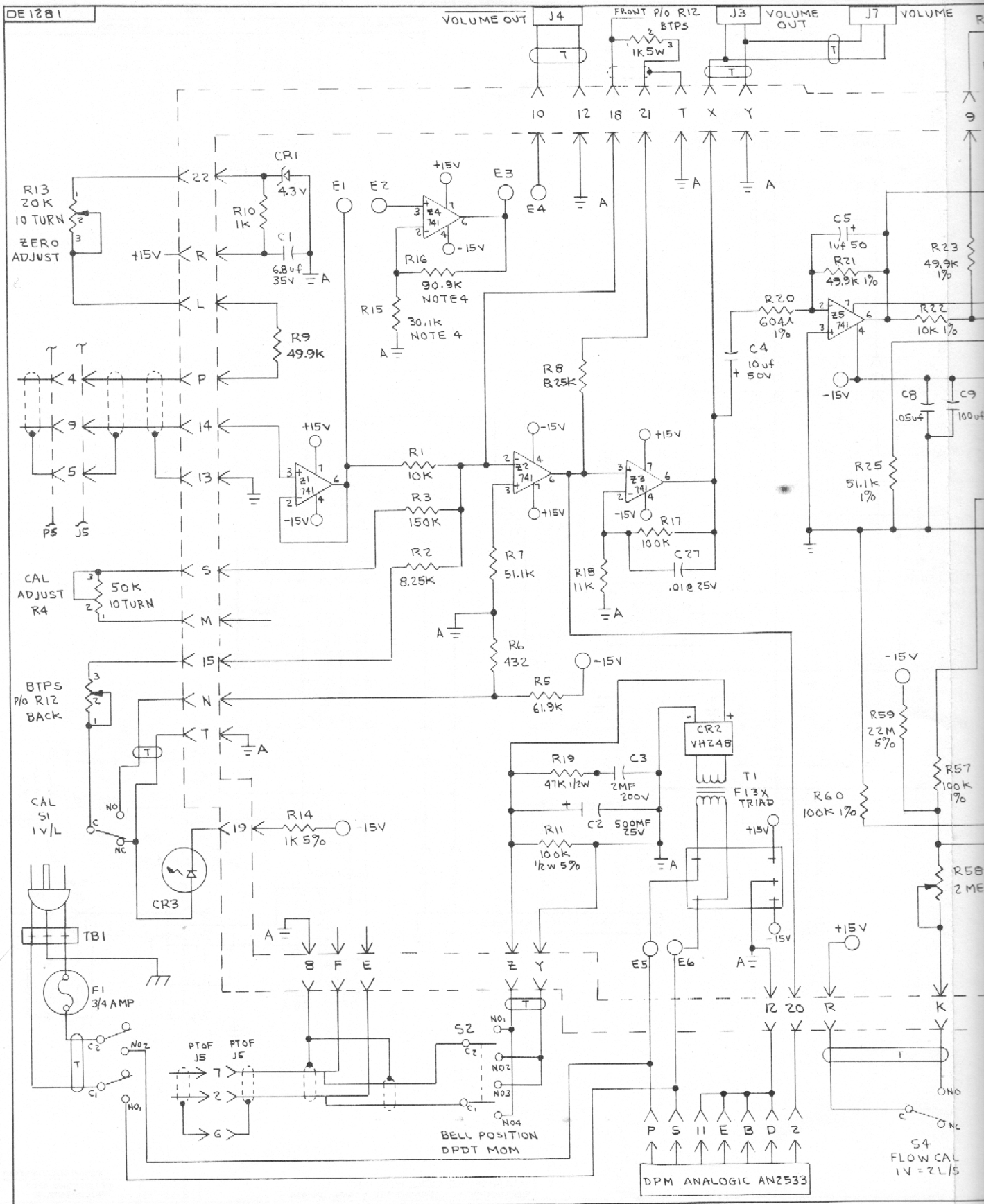

Figure 21 - Flow-Volume

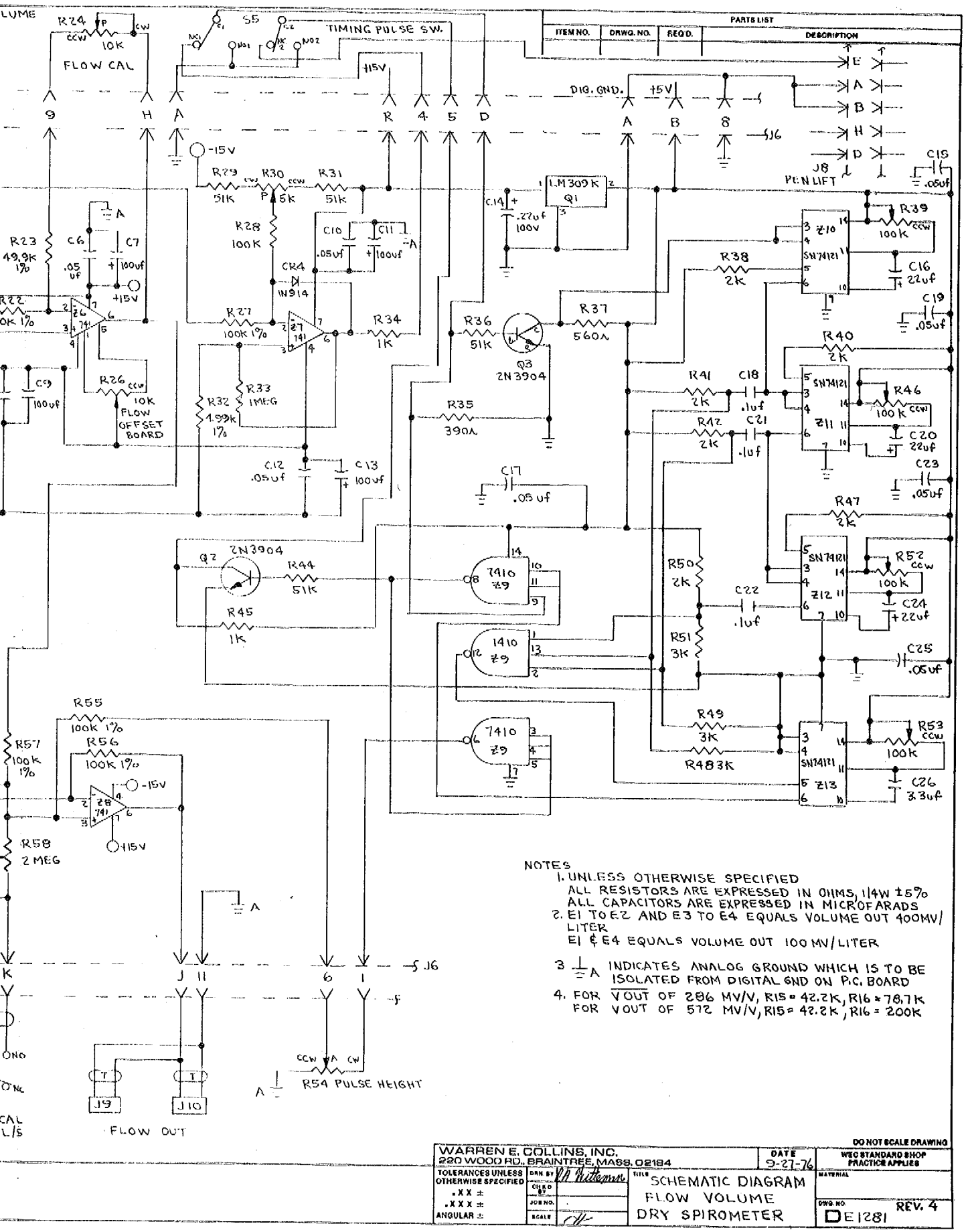

lume Module Schematic

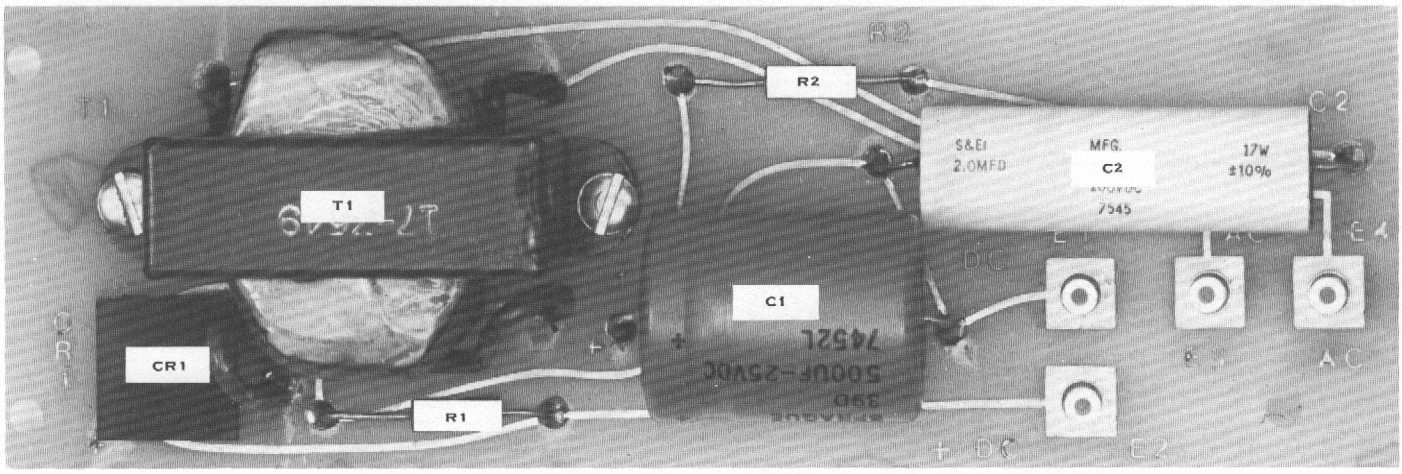

Figure 22 - Basic Module Circuit Board

PARTS LISTING FOR BASIC MODULE CIRCUIT BOARD				
				PART NUMBER
R1	100K	1/2W	5%	03-0148
R2	47K	1/2W	5%	03-0141
C1	500uf, 25V			05-0004
C2	2uf, 200V			05-0030
CR1	Bridge Rectifier, Vero VH248			08-0009
T1	Triad, F13X			11-0006
—	P.C. Terminals, Cambion 1548-3			
	(4 req'd.)			13-0023
—	P.C. Board, Basic Module			59-0039

ADDITIONAL PARTS – NOT SHOWN	
	PART NUMBER
Front Panel Casting, Basic	24-130
Rear Panel, Basic	24-129
Support Bar, Front to Rear	23-0154
Switch, Front Panel, Bell Position, C & K 7405	14-0103
Connector, Amphenol 5 Pin Female 126-218	13-0167
Connector, Amphenol 5 Pin Male 126-217-5	13-0166
Connector, Cinch DE9S	13-0098
Terminal Strip 52A	13-0149
Fuse Holder	39-0003
Nylon Spacer (4 req'd.)	46-0034
Hospital Grade Plug	13-0026

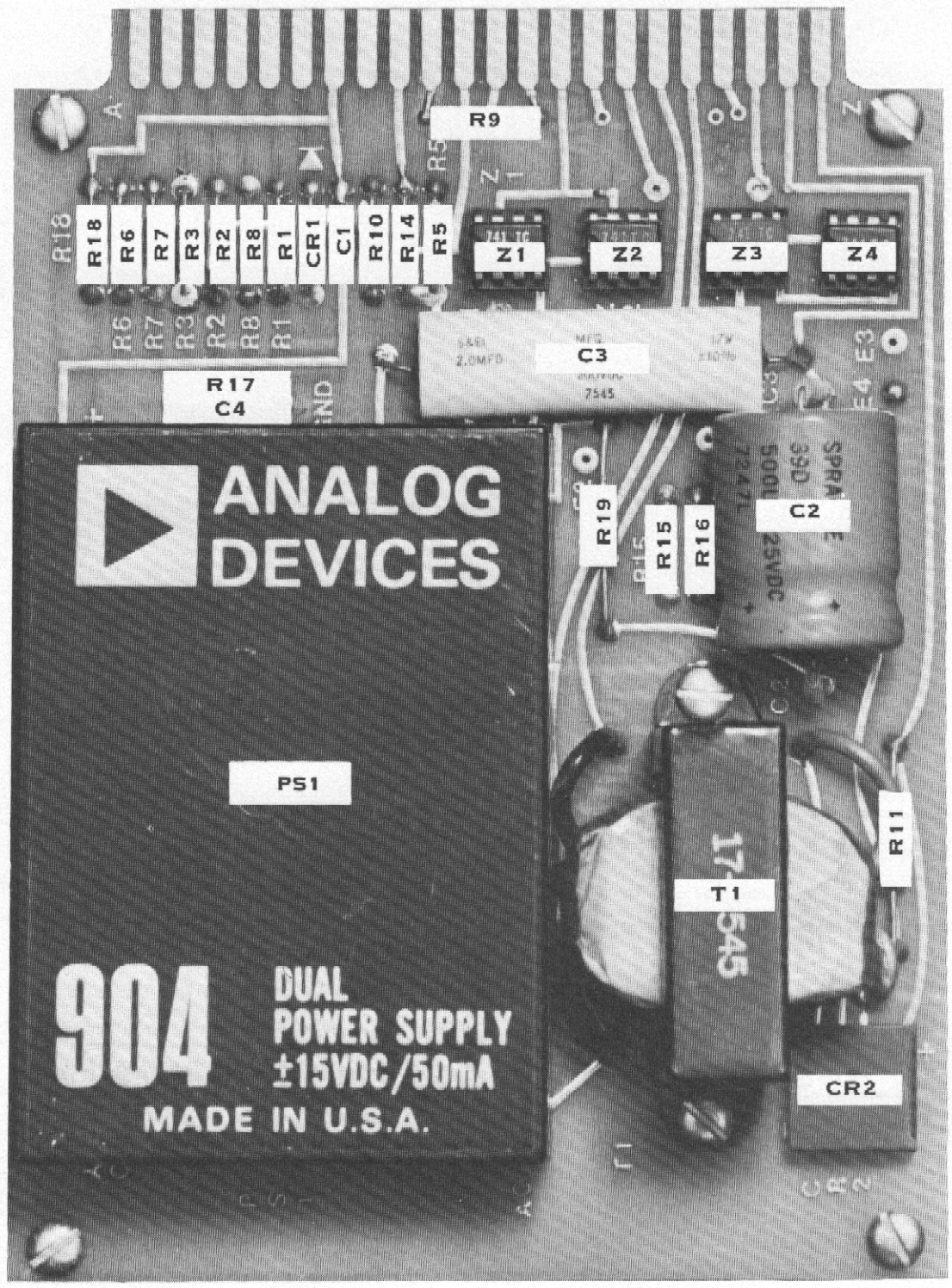

Figure 23 - Volume Module Circuit Board

PARTS LISTING FOR VOLUME MODULE CIRCUIT BOARD

				PART NUMBER
R1	10K	1/4W	1%	03-1051
R2	8.25K	1/4W	1%	—
R3	150K	1/4W	1%	03-1074
R4	Trimpot, Bournes, 50K			04-0032
R5	61.9K	1/4W	1%	03-1066
R6	432	1/4W	1%	03-1041
R7	51K	1/4W	1%	03-1067
R8	8.25K	1/4W	1%	—
R9	49.9K	1/4W	1%	03-1065
R10	1K	1/4W	1%	03-1031
R11	100K	1/2W	5%	03-0148
R12	Potentiometer, Dual, 1K, 5W			04-0071
R13	Trimpot, Bournes, 20K			04-0034
R14	1K	1/4W	1%	03-1031
R15	30.1K	1/4W	1%	03-1060
R16	90.9K	1/4W	1%	03-1073
R17	100K	1/4W	1%	03-1072
R18	11K	1/4W	1%	03-1064
R19	47K	1/2W	5%	03-0141
C1	6.8uf, 35V			05-0027
C2	500uf, 25V			05-0036
C3	2uf, 200V			05-0030
C4	.01uf, 25V			05-1001
CR1	Diode, 4.3V IN749			06-0046
CR2	Bridge Rectifier, Vero, VH248			08-0009
Z1-Z4	Fairchild 741C			08-0008
T1	Triad F13X			011-0006
PS1	Analog Devices			02-0007
—	I.C. Socket, 8 pin (4 req'd.)			13-0017
—	P.C. Board, Volume Module			59-0040

ADDITIONAL PARTS – NOT SHOWN

	PART NUMBER
Front Panel Casting, Volume	24-0121
Rear Panel, Volume	24-0117
Support Bar, Front to Rear	23-0154
Patch Cable, Rear Panel	09-0036
LED, Front Panel	48-0015
LED Holder, for 48-0015	48-0018
Digital Panel Meter and Bracket, Analogic AN2533	00-0009
Switch, Front Panel, Power, C & K 7201J2	14-0034
Switch, Front Panel, Bell Position, C & K 7205J2	14-0102
Switch, Front Panel, Calibrate, Switchcraft 913	14-0036
Connector, Edge, P.C. Board, Cinch 5044A30	13-0033
Connector, Rear Panel, Input, Cinch DE9S	13-0098
Connector, Amphenol 5 Pin Female 126-218	13-0167
Connector, BNC (3 req'd.)	13-0089
Solder Lugs, for BNC Connectors	13-0090
Terminal Strip 52A	13-0149
Fuse Holder	39-0003
Knob, Alco KPN700AB	40-0014
Nylon Spacer (4 req'd.)	46-0034
Hospital Grade Plug	13-0026

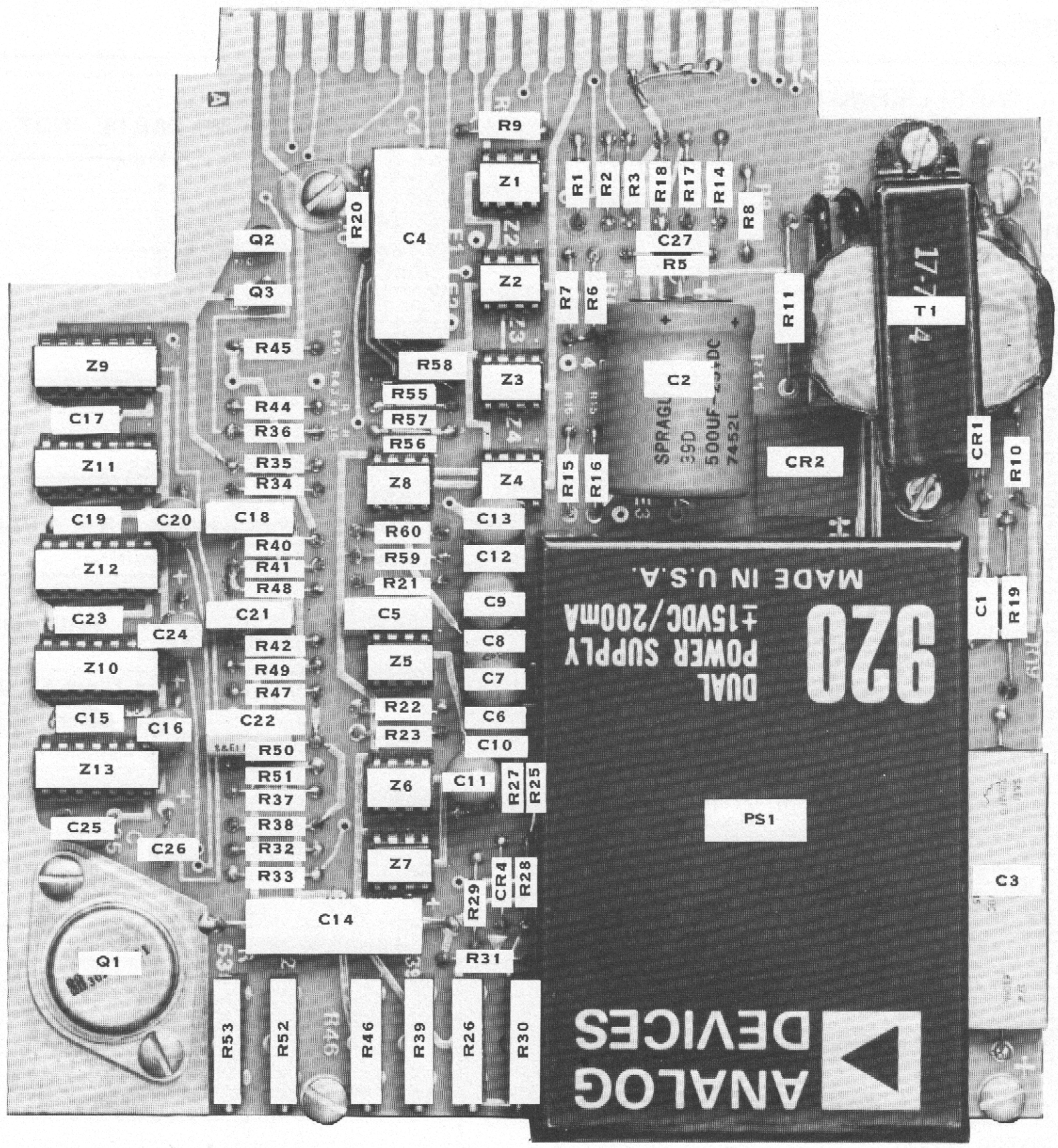

Figure 24 - Flow-Volume Module Circuit Board

PARTS LISTING FOR FLOW-VOLUME DIFFERENTIATOR CIRCUIT BOARD

				PART NUMBER
R1	10K	1/4W	1%	03-1051
R2	8.25K	1/4W	1%	—
R3	150K	1/4W	1%	03-1074
R4	Trimpot, Bournes, 50K			04-0032
R5	61.9K	1/4W	1%	03-1066
R6	432	1/4W	1%	03-1041
R7	51.1K	1/4W	1%	03-1067
R8	8.25K	1/4W	1%	—
R9	49.9K	1/4W	1%	03-1065
R10	1K	1/4W	5%	03-0014
R11	100K	1/2W	5%	03-0148
R12	Potentiometer, Dual, 1K, 5W			04-0071
R13	Trimpot, Bournes, 20K			04-0034
R14	1K	1/4W	5%	03-0014
R15	30.1K	1/4W	1%	03-1060
R16	90.9K	1/4W	1%	03-1073
R17	100K	1/4W	1%	03-1072
R18	11K	1/4W	1%	03-1064
R19	47K	1/2W	5%	03-0141
R20	604	1/4W	1%	03-1027
R21	49.9K	1/4W	1%	03-1065
R22	10K	1/4W	1%	03-1051
R23	4.99K	1/4W	1%	03-1043
R24	Trimpot, Bournes, 10K			04-0033
R25	51.1K	1/4W	1%	03-1067
R26	Potentiometer 10K			04-0037
R27	100K	1/4W	1%	03-1072
R28	100K	1/4W	5%	03-0026
R29	51K	1/4W	5%	03-0028
R30	Potentiometer 5K			04-0041
R31	51K	1/4W	5%	03-0028
R32	4.99K	1/4W	1%	03-1043
R33	1 MEG	1/4W	5%	03-0018
R34	1K	1/4W	5%	03-0014
R35	390	1/4W	5%	03-0011
R36	51K	1/4W	5%	03-0028
R37	560	1/4W	5%	03-0013
R38	2K	1/4W	5%	03-0016
R39	Potentiometer 100K			04-0038
R40	2K	1/4W	5%	03-0016
R41	2K	1/4W	5%	03-0016
R42	2K	1/4W	5%	03-0016
R44	51K	1/4W	5%	03-0028
R45	1K	1/4W	5%	03-0014
R46	Potentiometer 100K			04-0038
R47	2K	1/4W	5%	03-0016
R48	3K	1/4W	5%	03-0021
R49	3K	1/4W	5%	03-0021
R50	2K	1/4W	5%	03-0016
R51	3K	1/4W	5%	03-0021
R52	Potentiometer 100K			04-0038

				PART NUMBER
R53	Potentiometer 100K			04-0038
R54	Trimpot, Bournes, 5K			04-0031
R55	100K	1/4W	1%	03-1072
R56	100K	1/4W	1%	03-1072
R57	100K	1/4W	1%	03-1072
R58	Potentiometer 2 MEG			04-0070
R59	22MEG	1/4W	5%	03-0039
R60	100K	1/4W	1%	03-1072
C1	6.8uf, 35V			05-4001
C2	500uf, 25V			05-2013
C3	2uf, 200V			05-2010
C4	10uf, 50V			05-2019
C5	.1uf, 50V			05-2005
C6	.05uf, 20V			05-1009
C7	100uf, 20V			05-4013
C8	.05uf, 20V			05-1009
C9	100uf, 20V			05-4013
C10	.05uf, 20V			05-1009
C11	100uf, 20V			05-4013
C12	.05uf, 20V			05-1009
C13	100uf, 20V			05-4013
C14	.22uf, 100V			05-2002
C15	.05uf, 20V			05-1009
C16	22uf, 35V			05-4003
C17	.05uf, 20V			05-1009
C18	.1uf, 200V			05-2007
C19	.05uf, 20V			05-1009
C20	22uf, 35V			05-4003
C21	.1uf, 200V			05-2007
C22	.1uf, 200V			05-2007
C23	.05uf, 20V			05-1009
C24	22uf, 35V			05-4003
C25	.05uf, 20V			05-1009
C26	3.3uf, 15V			05-4008
C27	.01uf, 25V			05-1001
CR1	Diode 1N749			06-0046
CR2	Bridge Rectifier (Vero VH24B)			08-0009
CR4	Diode 1N914			06-0036
Q1	Regulator LM309K			06-0047
Q2	2N3904			06-0029
Q3	2N3904			06-0029
Z1-Z8	741C OP AMP			08-0008
Z9	7410 Integrated CKT			07-0025
Z10-Z13	SN74121 Integrated CKT			07-0017
PS1	Analog Devices 920			02-0009
T1	Triad F13X			11-0006
—	Kwik Disconnects, Keystone 1253			13-0142
—	I.C. Socket - 8 Pin			13-0017
—	I.C. Socket - 14 Pin			13-0144
—	P.C. Board, Flow-Volume			59-0041

continued next page

ADDITIONAL PARTS – NOT SHOWN	
	PART NUMBER
Front Panel Casting, Flow-Volume	24-0131
Rear Panel, Flow-Volume	24-0127
Support Bar, Front to Rear	23-0154
Patch Cable, Rear Panel	09-0036
LED, Front Panel	48-0015
LED Holder, for 48-0015	48-0018
Digital Panel Meter and Bracket, Analogic AN2533	00-0009
Switch, Front Panel, Power, C & K 7201J2	14-0034
Switch, Front Panel, Timing Pulses, C & K 7201J2	14-0034
Switch, Front Panel, Bell Position, C & K 7205J2	14-0102
Switch, Front Panel, Flow Calibrate, Switchcraft 913	14-0036
Switch, Front Panel, Vol. Calibrate, Switchcraft 913	14-0036
Connector, Edge, P.C. Board, Cinch 5044A30	13-0033
Connector, Rear Panel Input, Cinch DE9S	13-0098
Connector, Amphenol 5 Pin Female 126-218	13-0167
Connector, BNC (5 req'd.)	13-0089
Solder Lugs, for BNC Connectors	13-0090
Terminal Strip 52A	13-0149
Fuse Holder	39-0003
Knob, Alco KPN700AB	40-0014
Nylon Spacer (4 req'd.)	46-0034
Hospital Grade Plug	13-0026